BrienHoldenVisionInstitute

ABSOLUTE SENSITIVITY OF THE HUMAN EYE

AUTHOR

Thomas Salmon: Northeastern State University, USA

PEER REVIEWER

Scott Steinman: Southern California College of Optometry, USA

THIS CHAPTER WILL INCLUDE A REVIEW OF:

- Hecht, Schlaer & Pirenne's famous experiment
- Dark adaptation
- Sensitivity across the visual field
- Experiments and results

HECHT, SCHLAER & PIRENNE'S FAMOUS EXPERIMENT

In 1942, three scientists, named Hecht, Schlaer & Pirenne performed a famous experiment to answer the following question (Cornsweet, 1970).

- Under ideal conditions, what is the minimum amount of light that the human eye can detect?

In other words, they wanted to measure the absolute sensitivity of the human eye. We will review this classic experiment because their discovery was so amazing, and it is a great opportunity to study basic principles that scientists and clinicians must consider when testing vision. (Schwartz, 2004 briefly mentions this experiment in Chapter 3, page30).

At first this might seem to be a simple experiment. You should be able to measure the dimmest light that a human eye can see by showing a subject a light and reducing its brightness until it is no longer visible. It reminds me of the comment an entering graduate student made while I was at Indiana University. He asked, "What's so hard about getting a PhD? All you do is take the required courses, do some experiments, collect data and write it up." It didn't take long for him to discover that, when it comes to science (if you do it properly), things are **much** more complicated than you might think at first!

A description of Hecht's apparently simple experiment quickly becomes complicated when you consider the details. Besides building an apparatus that could precisely control the brightness of the light, they had to consider the following in their experimental design:

- How long should the subject dark adapt prior to starting the experiment?
- Where should the test light be presented in the visual field?
- How big should the light be?
- How long should it be left on?
- What color should the test light be?

DARK ADAPTATION

We know that the eye is much more sensitive if you've been in the dark for some time. For example, if you enter a theater or dark room on bright sunny day, you won't be able to see anything at first. With time, however, your eyes adjust to the dark and you will begin to see well even though the light level is very low.

Since they wanted to measure the ultimate sensitivity of the human eye, Hecht et al. wanted to test when the eye was maximally sensitive. Therefore, it was obvious that the subject should first let his/her eyes adjust to the dark.

The question arose: How long should the subject remain in the dark prior to beginning the experiment? Thirty minutes? Two hours? Eight hours? Research data was already available to indicate how the eye's sensitivity increases with time in the dark; this is called the **dark adaptation function** (Fig. 4-1).

Dark adaptation, or the ability of the eyes to adjust to the dark, increases rapidly but levels off after about thirty minutes. Therefore, they decided to dark adapt their subjects for at least forty minutes.

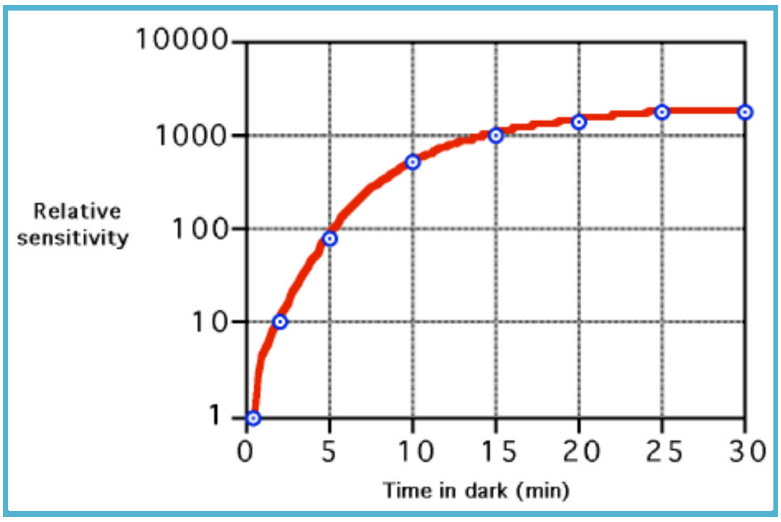

Figure 4-1: *Dark adaptation curve*

SENSITIVITY ACROSS THE VISUAL FIELD

Visual acuity varies for different parts of the retina. Best visual acuity is measured at the fovea, where the cone photoreceptors are most densely packed. Similarly the sensitivity of the eye varies with retinal location. This is primarily a function of rod photoreceptor density, so Hecht et al. decided to place the test light so that its image would fall on the part of the retina with maximum rod density. Figure 4.2 shows rod density across a horizontal cross-section of the retina.

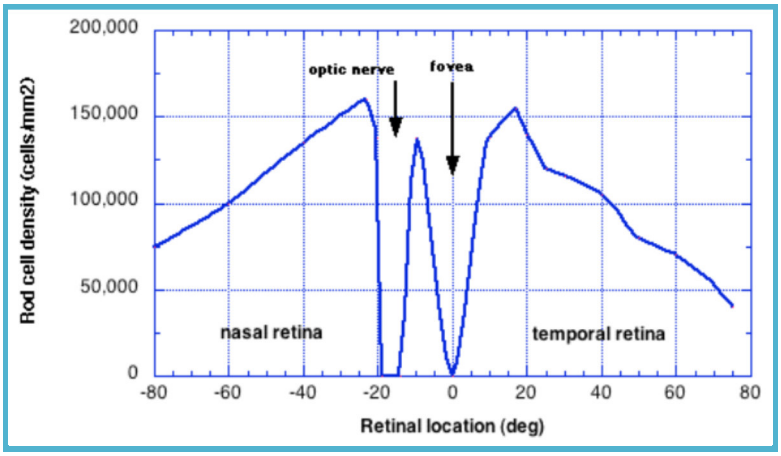

Figure 4-2: *Rod density across the retina (redrawn from Visual Perception, by Tom Cornsweet p. 11)*

SENSITIVITY ACROSS THE VISUAL FIELD (CONT.)

Rod density reaches a maximum at about 15-20° nasal or temporal to the fovea. Hecht decided to project the image to a point 20° temporal to the fovea, so he positio ned the test light so that it was 20° nasal to a fa int red fixation light, as illustrated in Figure 4-3.

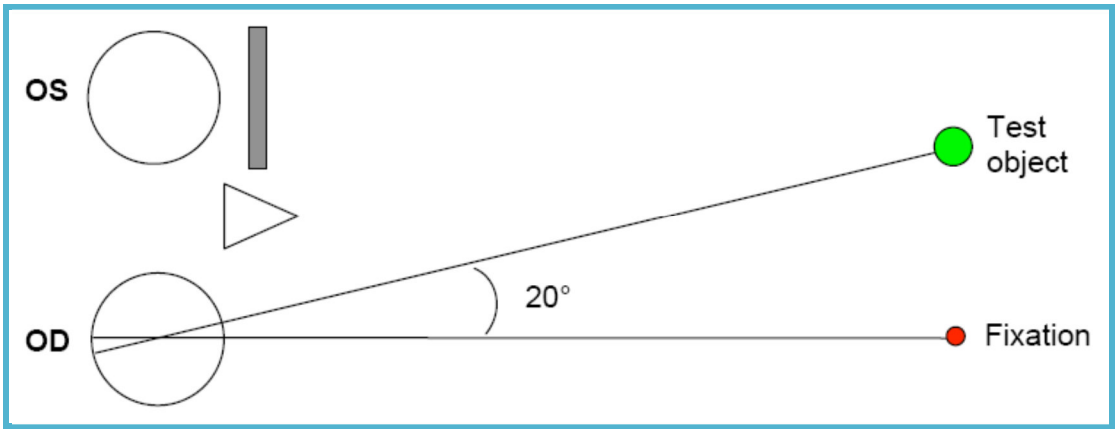

Figure 4-3: *Stimulus for the right eye was placed 20° to the left of fixation, so the image would fall on the temporal retina, where rod photoreceptor density was maximum*

STIMULUS SIZE

Studies had been done to determine the relationship between total number of quanta needed to detect a light and its size. As long as the test spot was less than about 10 arc minutes in diameter, the total light required for detection was constant. Beyond this size, more light was required to detect the stimulus. This is related to a phenomenon known as spatial summation and Ricco's law, topics we'll study in greater detail later. Hecht and his team decided to make their test spot 10 arc minutes in diameter, though a smaller light would have also been acceptable (Fig. 4-4).

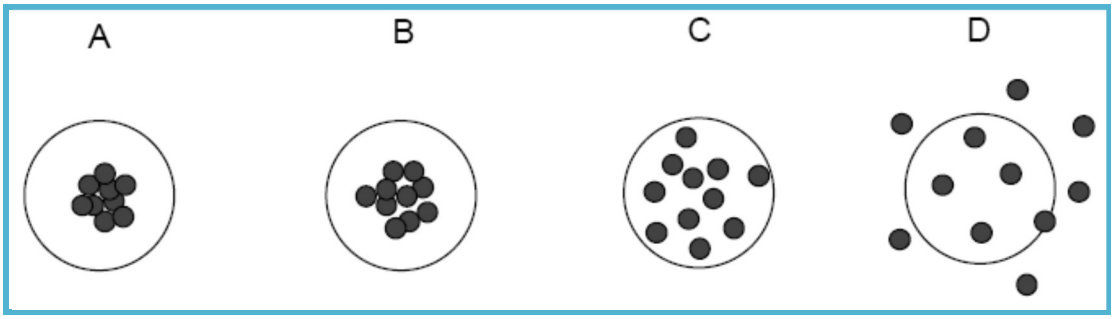

Figure 4-4: *Stimulus for the right eye was placed 20° to the left of fixation, so the image would fall on the temporal retina, where rod photoreceptor density was maximum*

As long as all of the light fell within a 10-arc-minute diameter circle (A through C), the total amount of light needed for detection did not matter. Dots show the distribution of photons. If the light distribution exceeded a diameter of 10-arc-minutes (D), more light was needed for detection. This phenomenon will be studied in greater detail in Chapter 9.

STIMULUS DURATION

Tests had already been done to study the relationship between the total number of quanta needed for detection and flash duration. As long as the flash duration was less than 100 milliseconds (the so-called critical duration for rods), the total number of quanta required for detection was the same. For longer durations, more light was required. This is related to **temporal summation** and **Bloch's law**, topics we'll study in more detail later in the section (Chapter 10). Hecht et al selected a flash duration of 1 millisecond.

SENSITIVITY ACROSS THE VISUAL FIELD (CONT.)

STIMULUS COLOR

Hecht conducted an experiment with the above conditions, but he used lights of differing wavelengths. He measured the minimum amount of quanta necessary for the subject to detect the light for different wavelengths, and found that under those conditions the eye was most sensitive to 510 nm (green) light (Fig. 4-5).

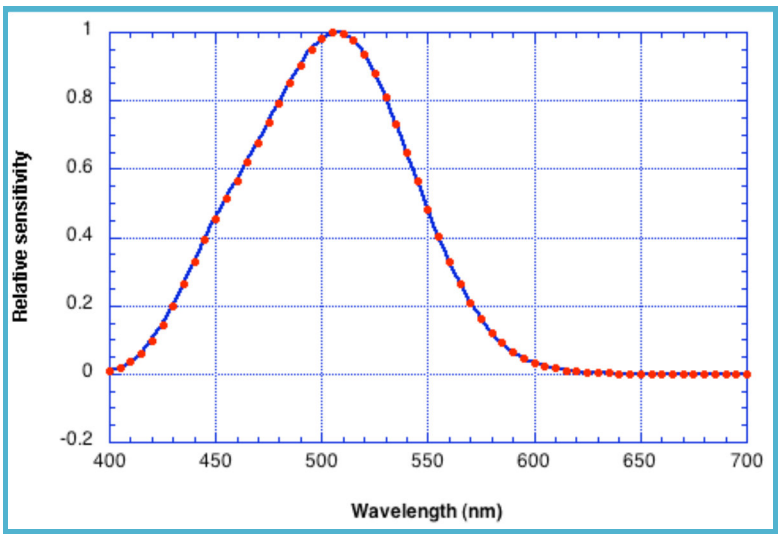

Figure 4-5: *Sensitivity plotted as a function of wavelength, under dark adapted conditions*

EXPERIMENTS AND RESULTS

After working out these details, Hecht conducted the experiments with the following conditions.

- Dark adapted subjects for 40 minutes
- One eye occluded, tested monocularly
- Subjects fixated a very faint dim red light
- Stimulus (test spot) was located 20° nasal to fixa tion
- Test spot diameter was 10 arc minutes
- Test light was flashed for 1 millisecond
- Wavelength was 510 nm (green)

When he/she was ready, the subject would press a button, and the test light would flash. He/she would then signal whether or not he/she saw it. Light intensity was then reduced to find the minimum he/she could see.

Hecht et al. determined that under these conditions, a person could barely see the light if just 90 quanta were presented just in front of the cornea. This is incredibly sensitive compared to any man-made light sensor.

This result led to another more interesting question: “If at least 90 quanta must enter the eye to be visible, what is the minimum amount of light that a rod photoreceptor can detect?”

If 90 quanta must be presented to the eye for detection, this does not necessarily mean that the retinal photoreceptors required a minimum of 90 quanta, because not all 90 photons would reach the retina. Most of the 90 quanta incident on the eye never reached the retinal photoreceptors. Hecht et al accounted for the 90 photons as follows:

- Of the 90 quanta incident on the eye,
- About 3% are reflected off the cornea
- About 47% are lost to absorption by optical media and pigment
- About 40% falls between the rods on the retina and is absorbed by the retinal pigment epithelium

That leaves an estimated 10% of the incident light. Therefore, only about 9-10 photons actually reached the retina and were absorbed by rods.

EXPERIMENTS AND RESULTS(CONT.)

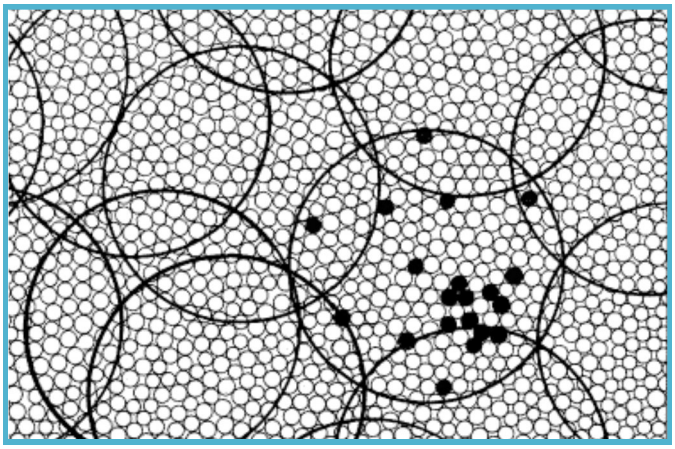

Figure 4-6:*Illustration of a few photons scattered across a 10-arc-minute area of the retina. The small white circles represent rods. [From Cornsweet (1970) p. 17]*

These 10 photons fell on a 10-arc-minute area of the retina, which contained an estimated 500 rods. If the photons were randomly distributed we can safely assume that each photon fell on a different rod. Hecht et al concluded that, if as few as 10 rods (within a 10 arc minute area) captured a photon, the person would detect the light. The most amazing conclusion was, quoting from Cornsweet:

This means that a **single quantum** must be sufficient to activate a rod, and that the effects of the activation of about ten rods all near each other are somehow added up by the visual system. ... the principle finding of Hecht et al., that a single quantum is sufficient to activate a rod, is firmly established.

(Cornsweet, T. Visual Perception. Academic Press, New York, 1970. p. 25-26.)

SELECTED READING/REFERENCES

- Schwartz SH. **Visual Perception - A Clinical Orientation, 3rd Edition**. Appleton & Lange, Stamford, Connecticut, 2004
- Cornsweet, T. **Visual Perception. Academic Press**, New York, 1970. Chapter 2