VERGENCE

AUTHORS

Michael Smith: Cape Peninsula University of Technology

PEER REVIEWERS

Dr B. Ralph Chou: Professor Emeritus, School of Optometry and Vision Science, University of Waterloo

Dr Vincent Nourrit: The University of Manchester

CHAPTER CONTENTS

DEFINITION 1
SIGN CONVENTION AND UNITS 2
CALCULATING VERGENCE 3
CURVATURE OF WAVEFRONTS 4
EFFECTIVITY 5
APERTURE, RADIUS OF CURVATURE AND SAGITTA 7
LENS CLOCK I 8

DEFINITION

Much of the work in geometrical optics is concerned with the convergence and divergence of pencils of light rays. In fact, the main purpose of spectacle lenses is to alter the extent of convergence or divergence of light rays before they enter the eye. The convergence or divergence of a pencil of light rays may be expressed by the general term ***vergence***.

The vergence at a particular point in a pencil of rays travelling in air is the reciprocal of the distance from the point to the source or the focus.

Clearly, we will be dealing with a source in the case of a diverging pencil and a focus in the case of a converging pencil. From the definition, it follows that the closer the point in question is to the source (or focus), the larger the vergence, and vice versa.

The definition of vergence stated above does not distinguish between those points which are situated in converging pencils of rays and those points which are situated in diverging pencils. In order to be able to distinguish between diverging and converging pencils, when studying the effects of optical components such as lenses, a *sign convention* must be employed. A sign convention is a set of definite rules such that the value of any distance measured on an optical diagram may be given a positive or a negative sign, corresponding to convergence and divergence respectively.

SIGN CONVENTION AND UNITS

The sign convention for vergence is as follows.

1. In optical diagrams, light is assumed to travel from the left to the right in a **positive** direction. If the distance from the point in question to the source or focus is measured in the s*ame direction* as that in which the rays of light are directed, the numerical value of the distance is given a *positive sign* (+).

2. If the distance from the point in question to the source or focus is measured in the *opposite direction* to that in which the light is travelling, the magnitude of the distance is given a *negative sign* (−).

Refer to the below figures. The distance from the point **D** to the source is measured in the opposite direction to the direction in which the light is travelling and we must apply a minus sign to the distance **d**. Hence, the vergence at **D** (= 1/d) will be a negative value.

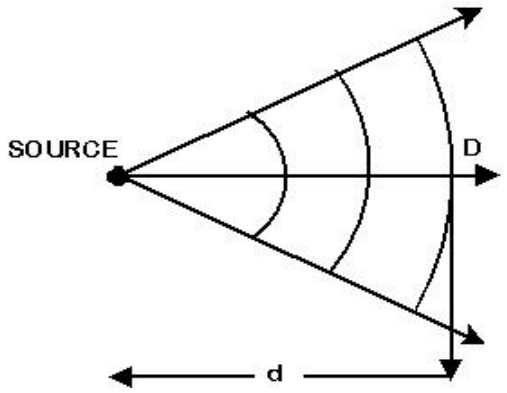

Figure 2.1: *Diverging pencil of rays. The distance d is measured from the point to the source, hence from right to left leading to a negative value*.

However, the distance from the point **C** to the focus is measured in the same direction as the direction in which the light is traveling and the value of the distance **c**is assigned a plus sign. Therefore, the vergence at **C** (= 1/c) will be a positive value.

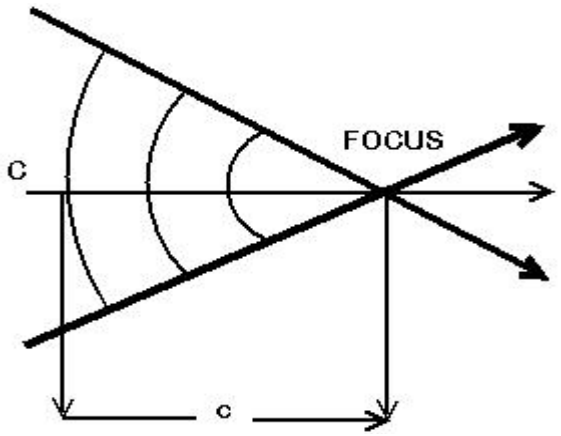

Figure 2.2: *The distance c is measured from the point to the focus, from left to right, leading to a positive value.*

These rules result in the important conclusion that at any point in a *converging* pencil of rays the value of the vergence of the light is *positive,* and at any point in a **diverging** pencil of rays the value of the vergence of the light is **negative***.* It also follows that at any point in a parallel pencil of rays, for which the source or the focus may be considered to be at infinity, the vergence will be derived as follows:

$$\text{vergence} = \frac{1}{\pm\infty} = 0$$

That is, at any point in a *parallel* pencil of rays, the value of the vergence of the light is *zero*.

If the distance from a point in a pencil to the source or focus is expressed in metres, then the value of the vergence at that point is expressed in *dioptres.* We can define *one dioptre,* symbol 1 D, as being the magnitude of the vergence in a pencil of rays in air, at a point *one metre* from the source or the focus.

CALCULATING VERGENCE

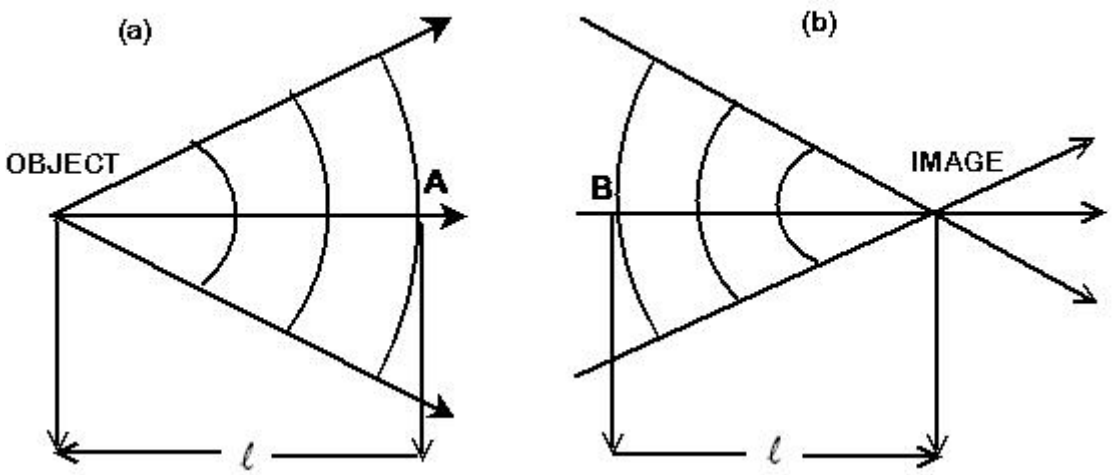

Figure 2.3: *a) Diverging pencil of rays b) Converging pencil of rays*

Refer to the previous diagrams of which (a) shows a diverging pencil and (b) shows a converging pencil of rays.

The point from which the diverging pencil of rays actually originates will now be referred to as an *object*. In optics, the distance from a point such as **A** to an object is represented by the symbol l. Thus the distance from **A** to the object = l where l is measured in metres. The vergence at **A** is 1/ l and this is given the symbol L (dioptres).

$$L(\text{dioptres}) = \frac{1}{\mathbf{l}\,(\text{metres})}$$

The point through which all the converging rays pass will be referred to as an *image.* We will represent the distance from a point such as **B** to an image by l as well. Care must be taken to apply the sign convention in order to find the correct sign for the vergence. The vergence at **B** will then also be given by the above equation.

For any optical medium with an index of refraction n, the vergence of the light travelling through the medium is given by

$$L = \frac{n}{l}$$

It is worth emphasizing that the dioptre unit is really the reciprocal metre (m^{-1}). The dioptre is merely a unit of convenience which is easier to say than 'reciprocal metre', but when considering units in some equations it will be necessary to think in terms of reciprocal metres. The name dioptre was chosen from dioptrics, the name given to the branch of optics dealing with refraction.

CURVATURE OF WAVEFRONTS

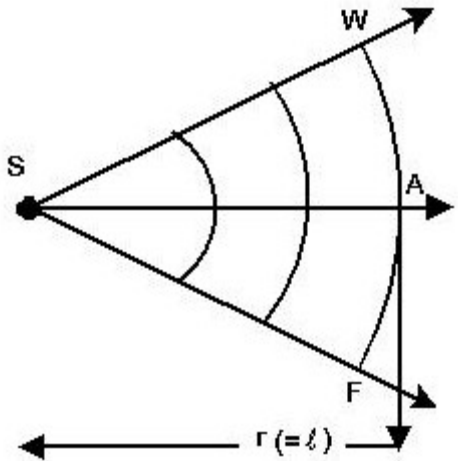

Figure 2.4: *Curvature of wavefronts*

The above figure shows a diverging pencil of rays having spherical wavefronts diverging from a point source **S**. The centre of curvature of each wavefront will coincide with **S**. For a particular wavefront such as **WF,** let the *radius of curvature* be **r**, as measured *from* the wavefront *to* the source.

Let us now define the *curvature of the wave-front,* symbol **R**, as the reciprocal of the radius of curvature; that is,

$$R = \frac{1}{r}$$

This means that as the radius (**r**) of a wavefront increases, the curvature (**R**) of the wavefront decreases. But we have previously seen that the *vergence* at the point **A** on the wavefront is given by

$$L = \frac{1}{l} \text{ where } l \text{ represents the distance from A to the source}$$

We therefore deduce from the foregoing the very important conclusion that:

The vergence at any point in a pencil of rays in air or vacuum is equal to the curvature of the wavefront at that point.

As the unit of measurement for vergence is the dioptre, then we shall also express the curvature of a wavefront in dioptres. This requires the radius of curvature to be expressed in metres, so that

$$R(\text{dioptres}) = \frac{1}{r(\text{metres})}$$

It is useful to note that curvature is not confined to wavefronts. The quantity may also be used in connection with the curved surfaces of lenses and mirrors. In all cases, whether these are wavefronts, or lenses, or curved mirrors, the curvature and the radius of curvature are related by the previous equation. As with most other optical quantities, a radius of curvature must be subjected to the rules of the **Sign Convention**. In order that we comply with our convention for vergences, the numerical value of the radius of curvature will be given a positive sign or a negative sign as follows:

> Measuring from the curve towards its centre of curvature, the radius value is given a *positive* sign if the measurement is in the *same direction* as that in which the light travels, but the radius value is given a *negative* sign if the measurement is in the *opposite direction* to that in which the light travels.

Let us apply this sign convention to some wavefronts. In the previous diagram, the value of the radius of curvature r of the wavefront WF is given a **negative** sign. Hence, the curvature will be negative.

In (b – below), the value of the radius of curvature r of the wavefront at **B** is given a **positive** sign and the curvature will be positive. In (c), the radius is infinite and the curvature is consequently **zero**. That is, a *plane wavefront has zero curvature*.

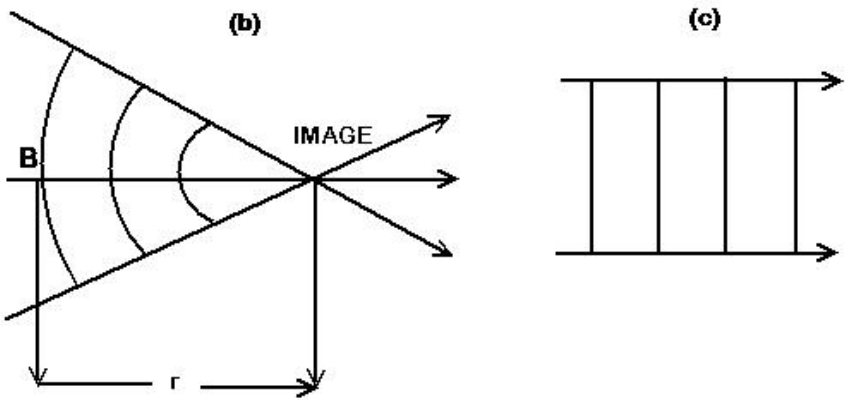

Figure 2.5: *Wavefronts with b) positive curvature, and c) zero curvature*

EFFECTIVITY

The principle of effectivity is very important in ophthalmic optics, and is concerned with the changes that occur in the vergence of a pencil of rays at different points along its path. Examples of particular importance concern the pencil of rays passing through the air space between a spectacle lens and the eye, and the light passing through the thickness of a thick lens.

Let us consider a converging pencil of rays travelling in air, as in the following figure;

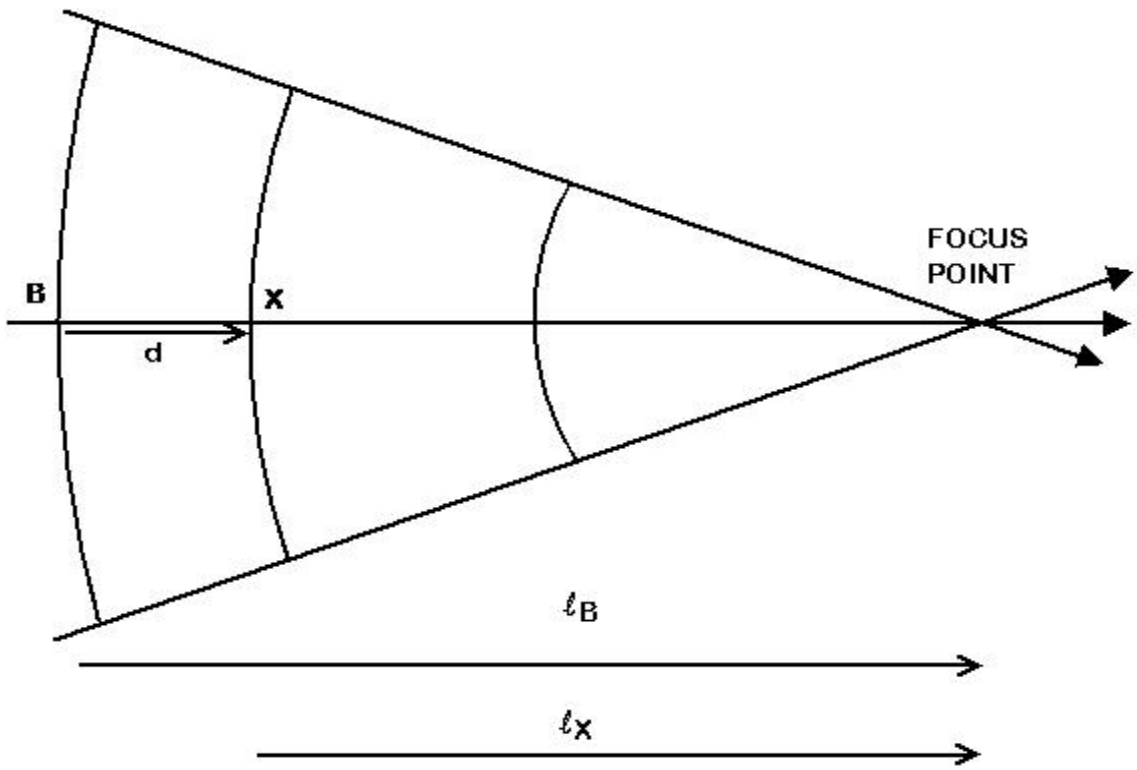

Figure 2.6: *A converging pencil of rays*

At some point **B** the vergence of the pencil of rays is given by:

$$L_B = \frac{1}{l_B}$$

Now, at some other point **X** positioned a distance **d** from B the vergence is

$$L_X = \frac{1}{l_X} = \frac{1}{l_B - d}$$

$$\therefore \; L_X = \frac{1}{\frac{1}{L_B} - d} = \frac{1}{\frac{1 - dL_B}{L_B}}$$

This expression can be simplified as follows:

$$L_X = \frac{L_B}{1 - dL_B}$$

Thus, L_x is the vergence of the pencil of rays at X and is referred to as the *effectivity* of the pencil at X.

In using this expression all symbols are subject to the rules of the sign convention. **d** is taken as *positive* when measured to the *right*. It is taken as *negative* when measured to the *left*.

APERTURE, RADIUS OF CURVATURE AND SAGITTA

As stated previously, the curvature of a spherical surface is given by R = 1/r where r is the radius of curvature. This is applicable to the spherical surface of a lens as well as to the spherical wavefronts in a pencil of rays. The figure below shows a section of a sphere taken through its centre, **C**. The portion **ABD** represents a section through a wavefront, or a lens surface, forming part of a sphere. The aperture of the wavefront, or lens surface, is 2y and the radius of curvature is r.

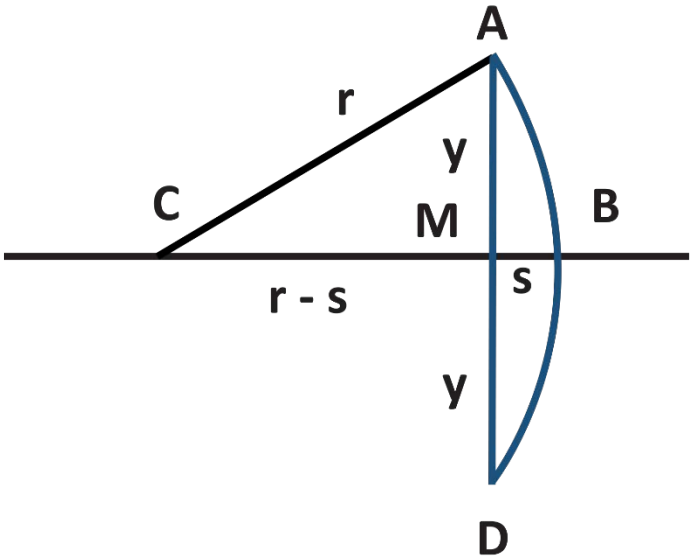

Figure 2.7: *Diagram of a section of sphere*

Applying the Pythagorean theorem to the right-angled triangle **CAM**:

$$r^2 = y^2 + (r-s)^2 = y^2 + r^2 - 2rs + s^2$$

giving $y^2 = 2rs - s^2$

If **s** is very small compared with **r**, then we may ignore the term s^2.
Hence, $y^2 = 2rs$, approximately.

That is,

$$r = \frac{y^2}{2s} \quad \text{or} \quad R = \frac{2s}{y^2}$$

The small distance **s** (the depth of the arc) is called the *sagitta or sag* of the arc ABD. Hence we see that, for a given small aperture, R ∝ s. That is, *curvature of arc ∝ sagitta of arc.* The above expression shows that the radius of curvature, r, depends on the aperture, y, and the sagitta or sag, s, of the curve. In the case of lens and mirror surfaces which are portions of spheres, these dimensions are easily measured with a spherometer, from which the radius of curvature may be calculated. This is important since it will be seen in your study of ophthalmic lenses that the radius of a surface is a vital parameter involved in the surface's ability to change the vergence of light incident upon it.

Loosely defined, **the sag is the thickness of material required to accommodate a surface of given radius of curvature with a given aperture**. It is a measure of the optical material removed to yield an optical curve.

The thickness of any lens can be found by adding to the sag the specified minimum thickness of the lens. If the lens is positive, the minimum thickness lies at the edge of the lens. Thus, calculation of the sag permits the determination of the centre thickness for a specified edge thickness.

Similarly, the minimum thickness of a negative lens lies at the optical centre. Thus, calculation of the sag permits the determination of the edge thickness for a specified centre thickness.

LENS CLOCK I

A lens clock is a specialized form of spherometer. It is used to indicate the dioptric power of a lens surface. For this power to be known, we need to know both the radius of curvature and the refractive index of the material. At this stage, we will only consider how the radius of curvature is obtained.

The instrument has three pins or pointers. The outer pins are fixed and a known distance apart. **The distance between the pins corresponds to the distance 2y (aperture) in the previous section.**

The centre pin can move in and out. On a plano (flat) surface, the three pins will all be at the same height. On a concave surface the centre pin will extend further than the other two. **The difference between the length of the centre pin and the length of the outer pins will give the sagitta of the surface**.

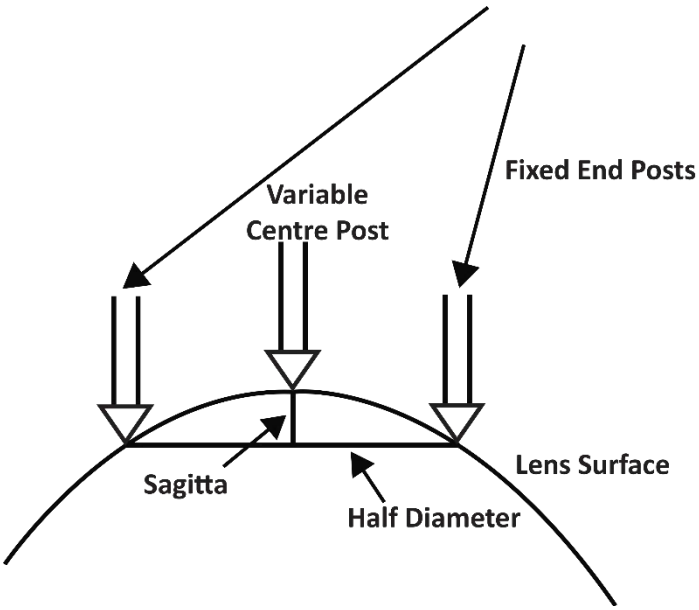

Therefore, placing the lens clock on a lens surface will register the values of y and the sagitta in the instrument. With appropriate calibration (the refractive index of the material needs to be taken into account) the lens clock can give quite accurate indications of surface powers for standard lenses.