PHOTOMETRY

AUTHORS

Michael Smith: Cape Peninsula University of Technology

PEER REVIEWERS

Dr B. Ralph Chou: Professor Emeritus, School of Optometry and Vision Science, University of Waterloo

Dr Vincent Nourrit: The University of Manchester

CHAPTER CONTENTS

INTRODUCTION 2
SOLID ANGLES 2
LUMINOUS POWER AND LUMINOUS INTENSITY 3
LUMINOUS EFFICIENCY AND LUMINOUS EFFICACY 4
RADIOMETRIC AND PHOTOMETRIC UNITS 4
ILLUMINANCE 4
FUNDAMENTAL LAWS OF PHOTOMETRY 5
LIGHT SOURCES 6
LASERS 10
LIGHT EMITTING DIODES 13

INTRODUCTION

Photometry may be described as ***the study and measurement of light in terms of the visual response it produces***. The eye does not respond with equal sensitivity to light of different colours; the sensitivity is a maximum for green light and it decreases towards both ends of the visible spectrum. Consequently, although they produce significant damage to the eye, IR and UV light do not produce that much of a visual response compared to some visible light.

The sensitivity curve, sometimes referred to as the *luminosity curve*, gives the relative brightness as assessed by the average eye of the different colours of the spectrum. For the average light adapted eye at moderate intensities (*photopic vision*) the maximum visual effect is obtained with light of wavelength 555nm (yellow-green). This maximum shifts to 500nm in scotopic vision (for the average dark adapted eye). This is known as the Purkinje shift.

The electromagnetic spectrum covers a wide range of wavelengths. However, in photometry we restrict ourselves to visible light (officially the region from 360 to 830 nm). This is done because the aim of photometry is to measure light in such a way that the results correlate with human vision.

(The study of radiant energy, including visible light, without regard to its visual response is known as **radiometry**.)

Occupational Safety legislation puts a duty on employers to provide sufficient lighting of suitable standard for specific purposes. By ensuring that photometric quantities conform to standards, mankind benefits in terms of:

- reduction of eyestrain
- fewer accidents
- better working conditions
- greater productivity
- improved leisure facilities etc.

Most practical light sources are incandescent or fluorescent sources which emit energy over a wide range of wavelengths, mainly as wasted heat in the infrared part of the spectrum. The distribution of luminous power is not uniform in all directions and light is emitted from different points on the source. However, we simplify matters by assuming that:

(i) the dimensions of the source are negligible compared to its distance from a surface or object and
(ii) the light is emitted equally in all directions.

The first assumption amounts to saying that we will consider all sources to be **point sources**. The second assumption is of course equivalent to saying that we consider all sources to be **isotropic**.

SOLID ANGLES

The unit solid angle, or steradian, is the solid angle of a cone that, having its apex at the centre of a sphere, cuts off an area of the sphere's surface equal to the square of its radius.

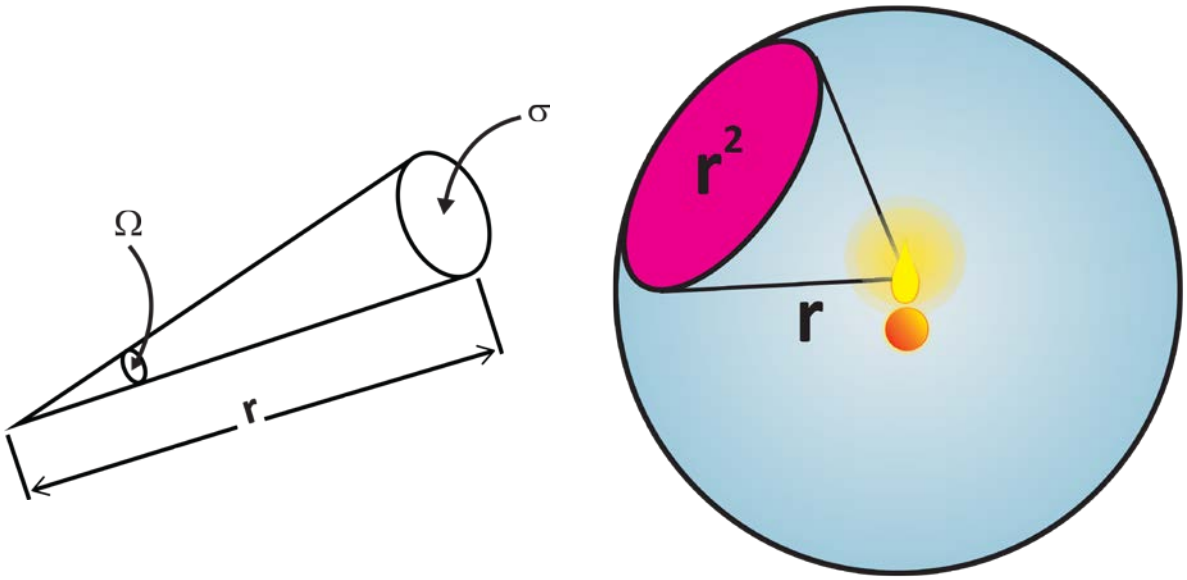

Figure 8.1: *Representation of a steradian*

The number of steradians in any solid angle is given by the area of the sphere's surface that is included in the angle divided by the square of the radius, i.e.:

$$\text{solid angle} = \frac{\text{area}}{r^2} = \frac{\text{Area at cone opening}}{(\text{cone length})^2}$$

LUMINOUS POWER AND LUMINOUS INTENSITY

The term central to photometry is luminous power, **Φ**. This is because the visual sensation produced depends on the rate at which light energy reaches the retina and not on the total energy. Hence, a dimly lit object will not continue to grow brighter and brighter as it is observed. ***The rate at which light energy flows is called the luminous power (flux)***.

The luminous power is therefore the luminous energy flowing per second and this could be expressed in joules per second (watts). However, in photometry, we use the unit called the **lumen**.

Definition:

One **lumen** is the luminous power emitted into a unit solid angle (1 steradian) from a point source of intensity 1 candela.

The total number of lumens emitted in all directions from a source is thus the luminous power. If we consider the ***luminous power emitted per unit solid angle***, we are now dealing with the ***luminous intensity***. This is indicated by the symbol **I** and has as unit the ***candela (cd)***.

We saw previously that there are 4π steradians round a point source. Therefore, **I** is related to **Φ** by the relationship : (**Φ** is the Greek letter phi.)

$$\Phi = 4\pi I$$

LUMINOUS EFFICIENCY AND LUMINOUS EFFICACY

A light may produce a great deal of radiant energy, (energy in the form of electromagnetic radiation) but relatively little luminous energy (visible light). To be useful for lighting purposes, we need most of the output to be in the visible region. Two concepts are used to indicate the effectiveness of a source. The **luminous efficiency** indicates the **fraction of the total power produced which is actually visible**. The units will be lumens per lumen.

$$\textbf{Luminous efficiency} = \frac{\textbf{luminous flux emitted}}{\textbf{total radiant power emitted}}$$

For example, a 60 watt incandescent light bulb produces the same luminous power as a 15 W fluorescent bulb. This is because much of the incandescent light bulb output is invisible infrared. Its luminous efficiency is much less since it is converting a large portion of the power input into wasted heat.

It should be noted that the power output at each wavelength is multiplied by a factor determined by the visual response of the eye to light of that wavelength. The human eye is most sensitive to green light with a wavelength of 555 nm. One watt of such light is “worth” 683 lumens. In contrast, infrared and ultraviolet radiation are invisible and therefore count zero lumens. Using the same principle, we find that one watt of 700 nm red light is “worth” only 27 lumens.

A related quantity is the **luminous efficacy**, which is the **ratio between the total luminous power emitted by a source and the total electrical power consumed by it**. It indicates how well a source can achieve the desired result of producing luminous power with the minimum input. The units will be lumens per watt.

$$\textbf{Luminous efficacy} = \frac{\textbf{luminous power emitted}}{\textbf{electrical power consumed}}$$

RADIOMETRIC AND PHOTOMETRIC UNITS

When measuring the light emitted by a source or incident on a receptor, two different systems of units can be used. In one system, light of different wavelengths are weighted similarly, i.e. no wavelength is more important than another. This is the radiometric system most people are familiar with, e.g. the energy emitted by a lamp by unit of time is measured in Watt. In some circumstances, such a measurement in Watt may not be useful. For instance a lamp emitting 10W in the IR would actually appear turned off to us. So an alternative system exists, the photometric system. In this system wavelengths are weighted according to how sensitive the eye is to them. The energy emitted by a lamp by unit of time is then measured in Candela.

Because light is usually made of many different wavelengths, there is not a simple rule to convert radiometric units into photometric units.

ILLUMINANCE

When luminous power is incident on a surface, the surface is said to be illuminated. This effect is described by the term illuminance which is defined as follows:

Definition:

The **illuminance** (symbol **E**) at a point on a surface is the **average amount of luminous power falling on unit area of the surface**.

$$E = \frac{\Phi}{A}$$

The **unit of illuminance** is lumens per square metre which is called the **lux**. The illuminance at a point on a surface does not depend on the nature of the surface since it is only concerned with incident light. **The total illuminance on a surface which is illuminated by more than one light source is simply the sum of the individual illuminances.**

The perceived brightness of an extended source or extended surface area is known as its **luminance**. It quantifies **light given off by (reflected from)** an extended area. The basic SI unit is the **nit** :

$$1 \text{ nit} = 1 \text{ candela/m}^2$$

The **footlambert** is another common unit.

FUNDAMENTAL LAWS OF PHOTOMETRY

Law 1.

The illuminance at a point on a surface is inversely proportional to the square of the distance between the point and the source.

This is known as the inverse square law and may be summarized in the following equation:

$$E = \frac{I}{d^2}$$

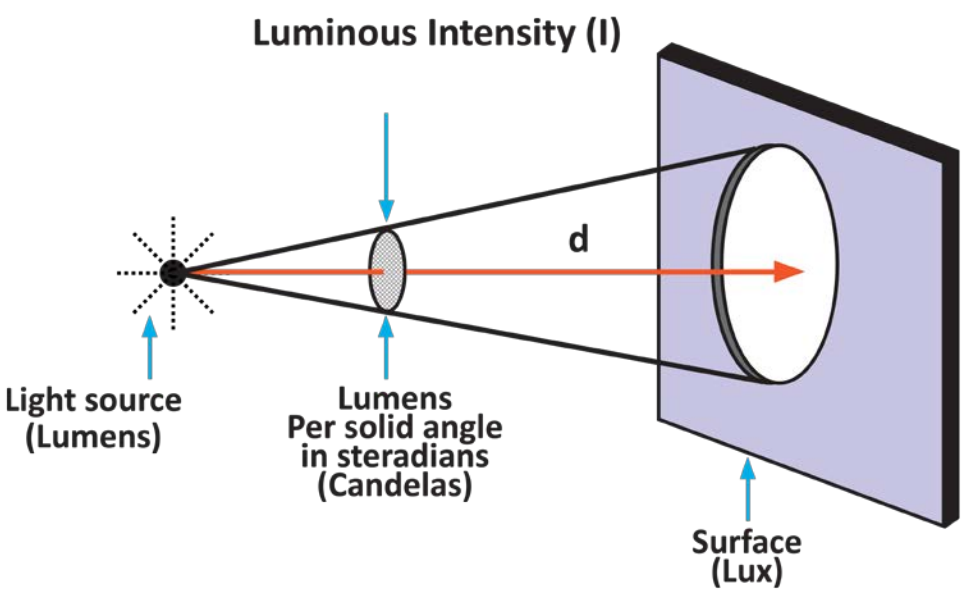

Figure 8.2: *Luminous intensity of light on a surface*

This will apply when the surface is not at an angle to the direction of the incident light (directly below or in front of the source). If the surface is at an angle to the incident light, the illuminance is reduced. This situation is catered for by the second law.

Law 2.

If the normal to an illuminated surface is at an angle θ to the direction of the incident light, then the illuminance is proportional to the cosine of θ.

In the form of an equation:

$$E = \frac{I \cos\theta}{r^2}$$

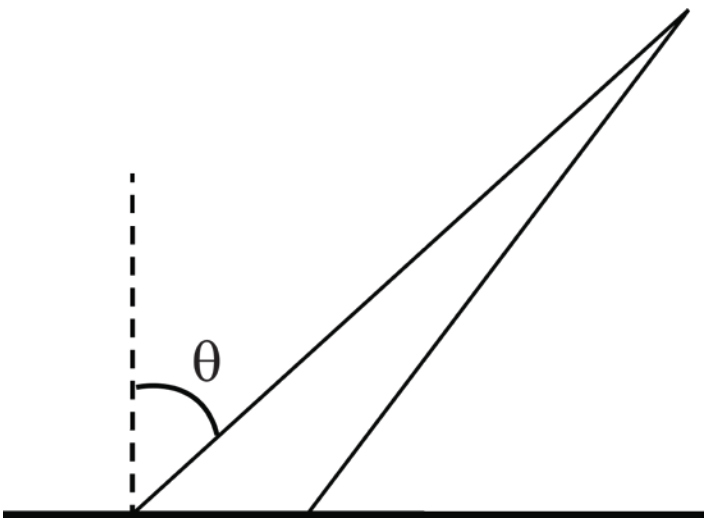

Figure 8.3: *Illuminance is proportional to the cosine of θ.*

LIGHT SOURCES

INCANDESCENT SOURCES

The word incandescent means “glowing with heat” and the hotter the source, the more it glows. As well as emitting more light, the source also changes colour from red through white to blue-white as the temperature increases.

These lamps have a “foot” for electrical contact that is of either a “bayonet” or “screw-in” type. A thin glass envelope encloses a metal filament in an atmosphere of an inert gas.

The source of light is a fine filament of tungsten metal through which an electric current is passed. The heating produced by passage of electric current through this resistor raises its temperature to a maximum of about 3500°C. This device converts only **a few percent** of the electrical energy to visible light and the bulk to heat and radiation outside the visible range. The electric current that flows leads to many collisions between the moving electrons and the atoms of the wire. These atoms become excited to higher energy levels and then emit radiation with energy equal to the energy difference between the ground and the excited states.

At this elevated temperature, the tungsten would rapidly oxidize. In some of the attempts to **avoid this oxidation**, the filament is enclosed in a glass envelope which is evacuated or filled with an inert gas, such as argon or nitrogen, under low pressure.

Even with this precaution, the tungsten is slowly vaporized from the filament onto the walls of the envelope. This reduces the transmission of current through the filament and eventually ends the life of the lamp after a few hundred hours of use. Furthermore, the deposits of tungsten darken the glass and reduce the output of the lamp.

Longer life can be obtained by reducing the power through the lamp but this reduces the colour temperature (lower intensity of particular wavelengths). Also, the efficacy of conversion of electrical power into light is reduced.

The conversion of electrical energy into visible light improves with higher filament temperatures but the increase in evaporation of the filament prevented the exploitation of this feature until the invention of the tungsten-halogen lamp. In this lamp, the inert gas contains iodine or bromine (typically less than 1% bromine) which has the property of redepositing evaporated tungsten onto the filament. A simulation of the so-called **halogen-regenerative cycle** can be viewed at the following web address:

http://zeiss-campus.magnet.fsu.edu/tutorials/halogencycle/index.html

A tungsten-halogen lamp creates an equilibrium reaction in which the tungsten that evaporates when giving off light is preferentially re-deposited at the hot filament, preventing the early failure of the lamp. This chemical transport reaction is based on WO_2I_2 or WO_2Br_2 formation at elevated temperatures and its decomposition at high temperatures at the tungsten filament. This also allows halogen lamps to be run at higher temperatures which would cause unacceptably short lamp lifetimes in ordinary incandescent lamps, allowing for higher luminous efficacy, apparent brightness, and whiter color temperature.

Because the lamp surface must also be kept hot to prevent crystalisation of WO_2I_2 or WO_2Br_2 at the glass surface (and to have the required temperature for the reaction of the halogen with condensed tungsten), the halogen lamp's envelope must be made of hard glass or fused quartz, instead of ordinary soft glass which would soften and flow too much at these temperatures. The bulb also has a much smaller shape so that it is easier to maintain the high temperature. The thicker glass allows the gas pressure to be made higher so that the rate of vaporization of the tungsten is reduced.

Because the lamp is smaller, it becomes economically worthwhile to use more dense (and more expensive) inert gases such as krypton or xenon. They retard the rate of tungsten vaporisation, prolonging the life of the lamp. In addition, they allow higher lamp temperatures, increasing luminous efficacy. The denser gases result in less heat being conducted away from the filament and more energy leaving in the form of radiation instead. Therefore the luminous output is slightly increased. Such lamps are used as light sources in many clinical instruments such as ophthalmoscopes, retinoscopes and biomicroscopes.

These lamps should not be handled with bare hands since dust or oil from fingerprints will reduce the lamp life. This is usually because these contaminants cause “hot spots” – regions of higher temperature – on the glass. This can cause overheating of the filament in their vicinity, causing the lamp to fail. In addition, hot spots can lead to an imbalance in the halogen/tungsten mix, with the excess tungsten vapour darkening the bulb prematurely.

Handheld clinical instruments such as direct ophthalmoscopes that have tungsten-halogen light sources can become extremely hot after extended use. Care should be exercised in handling such items.

GAS DISCHARGE TUBES

This consists of a glass tube containing a low-pressure gas and two electrodes. When an electric current is passed between the two electrodes, the gas is ionized. Gaseous ions are attracted to the charged electrodes and collisions with other ions cause excitation and further ionisations. These high-energy atoms and ions return to their ground states spontaneously. When they do, the emitted light has energy equal to the difference in energy between the excited and the ground states. This energy is characteristic of a gas and thus the emitted light has a colour characteristic of the gas.

Neon gas in the container, first used about 1910, gives a red light and mercury vapour a bluish light. Combinations of gases and coloured glass containers allow a variety of coloured lights. For example, helium in an amber glass glows gold, mercury in a yellow glass glows green, and combinations of gases yield white light. The sodium vapour lamp, developed in Europe about 1931, produces a yellow light.

Low Pressure Sodium Lamps

Low pressure sodium lamps are also known as sodium oxide lamps. They consist of a glass outer layer with a coating that reflects infrared light as well as another layer that will only let visible light out while keeping infrared light (which is heat) in. Then there are two smaller glass pipes inside that contain the sodium metal as well as a small mixture of neon and argon gases, which are used to light the sodium. The neon (and argon) atoms gain energy from the accelerated electron current and in turn bombard the metallic sodium contained in the bulb. The sodium soon vaporises in the low pressure bulb and is thereafter excited by the bombarding electrons passing from cathode to anode. The sodium atoms then emit light of the characteristic yellow 589.3 nm wavelength when they return to their ground states. The presence of neon accounts for the red glow seen before the sodium has vaporised.

High Pressure Sodium Lamps

High pressure sodium lamps are smaller and have additional materials within them, such as the metal mercury. The gas mixture heats up the mercury, which then heats up the sodium and causes it to vaporise. Because these lamps are made at high pressure, the light that the sodium emits is broadened. This makes it easier to distinguish the colours of objects under this light, which is why they are often used when good visualization of colour is important. While not as efficient as low pressure sodium lamps, the higher pressure variety is still relatively efficient.

Sodium lamps are often used for street illumination because of their relatively high efficiency and lower operating costs. Light from low pressure sodium lamps adversely affects colour perception, an aesthetic problem that is lessened by using high pressure sodium lamps. In many locations, street illumination by sodium lamps is being replaced by light emitting diode (LED) lamps.

FLUORESCENT LAMPS

When an atom is excited from one energy state to another by the absorption of a photon, it may return to the lower level in a series of two or more jumps if there is an energy level in between. The photons emitted will have lower energies and frequency than the absorbed photon. This phenomenon is called **fluorescence**. The emissions cease as soon as the original source of excitation is removed.

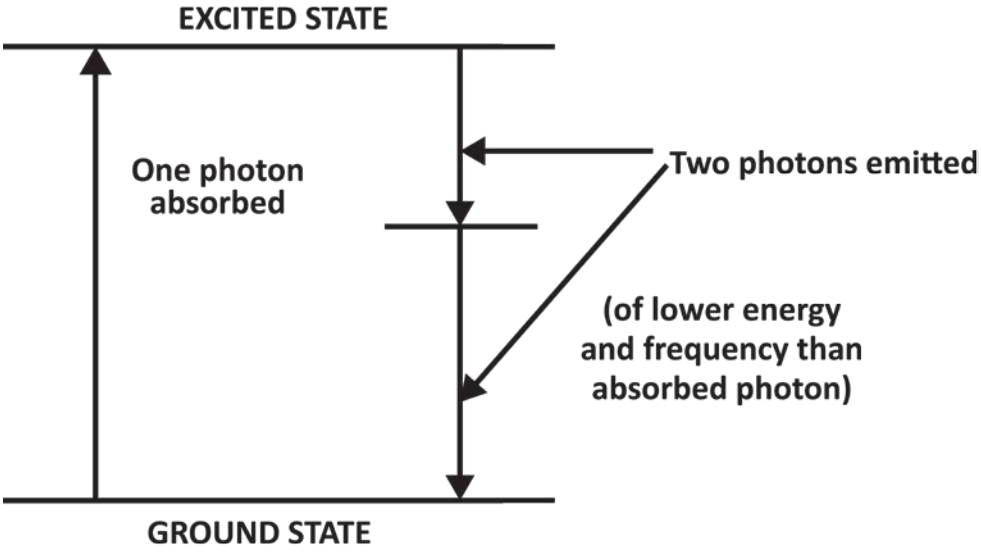

Figure 8.4: *Fluorescence caused by absorption and emittance of photons*

If the excited state is metastable (long-lived – much longer than the usual 10^{-8} s), light can be emitted long after excitation occurred. This phenomenon is known as **phosphorescence**.

In fluorescent lamps the light is generated in a two-stage process as the electric current is discharged through a mercury vapour. The mercury atoms produce ultra-violet light (as well as green and blue visible light) when the excited atoms return to their ground state. This ultra-violet light is then absorbed by the phosphor coating on the inside of the glass tube containing the gas. The phosphors fluoresce. They absorb the short wavelength UV radiation and emit longer wavelength white light; typical fluorescence behaviour.

Phosphors are frequently sulphides and oxides or silicates and phosphates of such metals as zinc, calcium, magnesium, cadmium, tungsten and zirconium. The range of elements means that a large number of energy levels are available and a wide range of radiation in the visible spectrum is produced.

Therefore fluorescent lamps produce a much broader range of colours than can be obtained with incandescent sources. Thus the luminous output is closer to white light. Fluorescent lamps are also more efficient at converting supplied electrical energy into luminous energy and they also produce less wasted heat radiation.

Unlike sodium lamps, the light from fluorescent lamps does not noticeably affect colour perception of people with “normal” colour vision. However, because the emission is characterized by a continuum with strong emission lines of mercury, there may be an effect on persons with anomalous colour vision.

Although compact fluorescent lamps (CFL’s) are replacing incandescent lamps at an increasing rate (mainly for the reduced power consumption), there remains the problem of the toxic mercury it contains. This causes a disposal problem that will remain with us for a long time.

LASERS

Laser is an acronym for **L**ight **A**mplification by **S**timulated **E**mission of **R**adiation. This is a relatively new technique although Einstein predicted it as far back as 1917.

COHERENT LIGHT

Light emitted by a common lamp is **incoherent**. It is emitted in all directions (so the intensity decreases rapidly with distance), and the **different parts of the beam are not in phase with each other**. The incoherence is enhanced by the fact that the emissions are polychromatic.

The excited atoms that emit the light in an ordinary light bulb act independently, so each photon emitted can be considered as a short wave train, typically 30 cm long and lasting 10^{-8} seconds. These wave trains bear no phase relationship to each other. The light is as incoherent as the footsteps on an auditorium floor when a mob of people is chaotically rushing about. Incoherent light is chaotic. A beam of incoherent light spreads out after a short distance, becoming wider and wider and less intense with increased distance.

Even if the beam is filtered so that it is a single frequency (monochromatic), it is still incoherent, for the waves are out of phase with one another.

STIMULATED EMISSION

The action of a laser is based on quantum theory. We know that a photon can be absorbed by an atom if (and only if) its energy, hf, corresponds to the energy difference between an occupied energy level of the atom and an available excited state. If the atom is already in the excited state, it may of course jump spontaneously to the lower state with the emission of a photon. However, if a photon with this same energy strikes the excited atom, it can stimulate the atom to make the transition sooner to the lower state. This phenomenon is called **stimulated emission**, and it can be seen that not only do we still have the original photon, but also a second one of the same frequency as a result of the atom's transition. And these two photons are exactly in phase (i.e. coherent), and they are moving in the same direction.
Normally, most atoms are in the lower state, so incident photons will mostly be absorbed. In order to obtain the **lasing action**, some **conditions** must be satisfied.

1. **Population inversion is needed**; one in which more atoms are in the upper state than in the lower one, so that emission of photons will dominate over absorption.

2. The **excited state must be a metastable state**—a state in which the electrons remain longer than usual so that the transition to the lower state occurs by stimulated emission rather than spontaneously.

3. The **emitted photons must be confined in the system long enough** to allow them to stimulate further emission from other excited atoms.

LASER ACTION

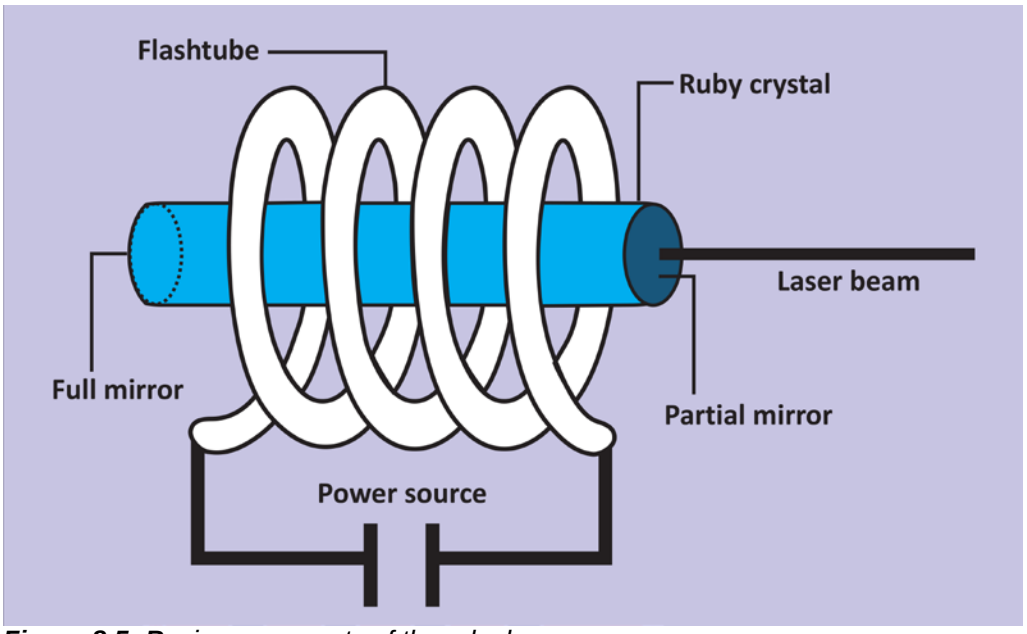

Figure 8.5: *Basic components of the ruby laser*

We will use the ruby laser as an example. The basic components of this laser are shown in figure 8.5. In a ruby laser, the lasing material is a ruby rod consisting of Al_2O_3 with a small percentage of aluminum ions replaced by chromium ions. The Cr atoms are the ones involved in lasing. The atoms are excited by strong flashes of light of wavelength 550 nm, which corresponds to a photon energy of 2.2 eV.

[1 eV is the energy (kinetic) gained when an electron is accelerated by a potential difference of 1 Volt. Since W = qV, 1 eV = $1.6 \times 10^{-19} \times 1 = 1.6 \times 10^{-19}$ J.]

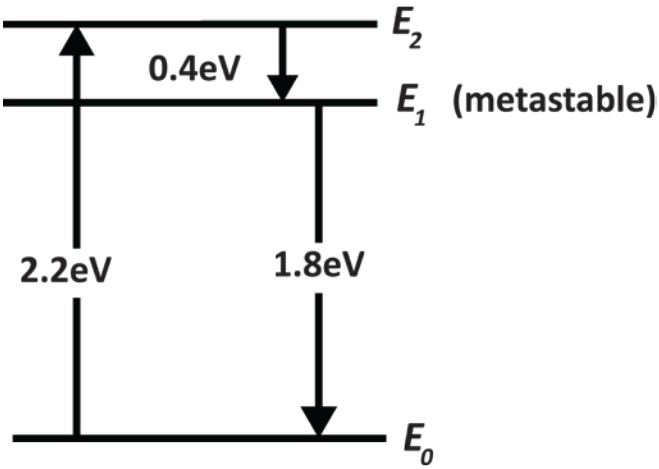

Figure 8.6: *Optical pumping in lasers*

The atoms are excited from state E_0 (ground state) to state E_2. The process of exciting the atoms is known as **pumping**. In general this can be done in a variety of ways. Since light is used in this case, it is called **optical pumping**. The atoms

quickly decay either back to E_0 or to the intermediate state E_1, which is metastable with a lifetime of about 3 x 10^{-3} s, (compared to approximately 10^{-8} s for ordinary levels). With strong pumping action, more atoms can be forced into the E_1 state than are in the E_0 state. Thus we have the inverted population needed for lasing.

As soon as a few atoms in the E_1 state jump down to E_0, they emit photons that produce stimulated emission of the other atoms and the lasing action begins. A ruby laser thus emits a beam whose photons have energy 1.8 eV and a wavelength of 694.3 nm (or “ruby red” light).

The ‘lasing” material in this laser is placed in a long narrow tube at the ends of which are two mirrors, one of which is partially transparent (perhaps 1 or 2 percent). Some of the excited atoms drop down fairly soon after being excited. One of these is the atom shown on the far left in the above diagram (Fig 8.6). If the emitted photon strikes another atom in the excited state, it stimulates this atom to emit a photon of the same frequency, moving in the same direction, and in phase with it. These two photons then move on to strike other atoms causing more stimulated emission. As the process continues, the number of photons multiplies. When the photons strike the end minors, most are reflected back, and as they move in the opposite direction, they continue to stimulate more atoms to emit photons. As the photons move back and forth between the mirrors, a small percentage passes through the partially transparent mirror at one end. These photons make up the narrow coherent external laser beam.

Inside the tube, some spontaneously emitted photons will be emitted at an angle to the axis, and these will merely go out the side of the tube and not affect the narrowness of the main beam. In a well-designed laser, the spreading of the beam is limited only by diffraction at the edges of the end mirror. The diffraction spreading can be incredibly small. The light energy, instead of spreading out in space as it does for an ordinary light source, is directed in a thin beam. This laser operates in a pulsed mode.

The excitation of the atoms in a laser can be done continuously or in pulses. In a pulsed laser, the atoms are excited by periodic inputs of energy. The multiplication of photons continues until all the atoms have been stimulated to jump down to the lower state, and the process is repeated with each pulse. In a continuous laser, the energy input is continuous so that as atoms are stimulated to jump down to the lower level, they are soon excited back up.

MEDICAL APPLICATIONS

Novel medical applications use the fact that the different laser wavelengths can be absorbed in specific biological tissues. A common eye condition, glaucoma, is manifested by a high fluid pressure in the eye which can lead to destruction of the optic nerve. A simple laser operation (iridectomy) can “burn” open a tiny hole in a clogged membrane, relieving the destructive pressure. Along the same lines, a serious side effect of diabetes is neovascularization, the formation of weak blood vessels, which often leak blood into extremities. When this occurs in the eye, vision deteriorates (diabetic retinopathy) leading to blindness. It is now possible to direct the green light from the argon ion laser through the clear eye lens and eye fluid, focus on the retina edges, and photocoagulate the leaky vessels. These procedures have greatly reduced blindness in glaucoma and diabetes patients.

A laser-based procedure known as photorefractive keratectomy (PRK) offers an alternative treatment for hyperopia and myopia. It involves the use of a laser to remove small amounts of tissue from the cornea and thereby change its curvature. This changes the way in which light is refracted, causing the image to be focused correctly on the retina. The light comes from a pulsed ultraviolet laser that produces a wavelength of 193 nm. The cornea absorbs this wavelength extremely well, so that weak pulses can be used, leading to highly precise and controllable removal of corneal tissue. Typically, 0.1 to 0.5 µm of tissue is removed by each pulse without damaging adjacent tissue. A major problem is the eye movements which occur roughly every 15ms. This is dealt with by stabilizing the eye mechanically or by using systems capable of tracking eye movements.

Laser surgery is now a practical reality. Infrared light at 10 mm from a carbon dioxide laser can cut through muscle tissue, primarily by heating and evaporating the water contained in cellular material. Laser power of about 100 W is required in this technique. The advantage of the laser knife over conventional methods is that laser radiation cuts and coagulates at the same tune, leading to substantial reduction of blood loss. In addition, the technique virtually eliminates cell migration, which is very important in tumour removal.

Another application is the treatment of retinal detachment, where the focused beam causes small burns that on healing keep the retina back in place by the formation of scar tissue. A cloudy posterior capsule, often left in place after removal of a cataract, can be opened quickly and without discomfort by posterior capsulotomy.

Lasers are used also in the treatment of melanoblastoma, a heavily pigmented tumor of the skin and the choroid of the eye that sometimes erupts into highly malignant growth.

LASER SAFETY

Any light, no matter where it comes from, can cause damage. But laser radiation is particularly dangerous, mainly because it can be focused down to very high intensities. In addition, many lasers emit in a region of the spectrum (red) where the light just does not seem to be as powerful as if it were white.

Because of the large loss of energy by other means which occurs in laser systems, the efficiency is usually about 0.1%. Thus a watt of energy must be supplied to a He-Ne laser to obtain a milliwatt of light. Most small gas lasers produce between one and 30 milliwatts of red light. In photometric terms this is equivalent to little more than 5 lumens. However, luminous intensity is measured in lumens per steradian and as these few lumens are concentrated into such a narrow beam (about 10-8 steradians instead of 4π), the intensity of the source seen looking along the beam is 500 million candela! In all but the very weakest laser, such intensity will cause damage before the muscles of the eyelid can close to protect the eye.

Which part of the eye is most subject to injury is a matter of wavelength. In the IR region, much of the energy is absorbed by water. Since water is the main constituent of almost any biological tissue, it is the cornea that is severely damaged first.

Light between 400 nm and 1400 nm, on the other hand, will penetrate through the eye and be absorbed in the pigment epithelium next to the retina. The pigment epithelium then virtually explodes, ejecting black granules into the vitreous; forming vapour bubbles and causing hemorrhages all around the destroyed tissue.

LIGHT EMITTING DIODES

A **diode** is the simplest possible semiconductor device. A diode allows current to flow in one direction but not the other.

A BRIEF HISTORY

Electroluminescence as a phenomenon was discovered in 1907 by the British experimenter H.J. Round using a crystal of silicon carbide. Russian O.V. Losev reported on the creation of a first light emitting diode (LED) in 1927. His research was distributed in Russian, German and British scientific journals, but no practical use was made of the discovery for several decades. Rubin Braunstein of the Radio Corporation of America reported on infrared emission from gallium arsenide (GaAs) and other semiconductor alloys in 1955. Braunstein observed infrared emission generated by simple diode structures using gallium antimonide (GaSb), GaAs, indium phosphide (InP), and silicon-germanium (SiGe) alloys at room temperature and at 77 Kelvin.

In 1961, American experimenters Robert Baird and Gary Pittman found that GaAs emitted infrared radiation when electric current was applied and received the patent for the infrared LED.

The first practical visible-spectrum (red) LED was developed in 1962 by Nick Holonyak Jr., while working at General Electric Company. Holonyak is seen as the "father of the light-emitting diode". M. George Craford, a former graduate student of Holonyak, invented the first yellow LED and improved the brightness of red and red-orange LEDs by a factor of ten in 1972. In 1976, T.P. Pearsall created the first high-brightness, high efficiency LEDs for optical fibre telecommunications by inventing new semiconductor materials specifically adapted to optical fibre transmission wavelengths.

Until 1968, visible and infrared LEDs were extremely costly, and so had little practical use. The Monsanto Company was the first organization to mass-produce visible LEDs, using gallium arsenide phosphide in 1968 to produce red LEDs suitable for indicators. The technology proved to have major uses for alphanumeric displays and was integrated into HP's early handheld calculators. In the 1970s, commercially successful LED devices, at under five (US) cents each, were produced by Fairchild Optoelectronics. The combination of planar processing for chip fabrication and innovative packaging methods enabled the team at Fairchild to achieve the needed cost reductions. These methods continue to be used by LED producers.

The first commercial LEDs were commonly used as replacements for incandescent and neon indicator lamps, and in seven-segment displays, first in expensive equipment such as laboratory and electronics test equipment, then later in such appliances as TVs, radios, telephones, calculators, and even watches. These red LEDs were bright enough only for use as indicators, as the light output was not enough to illuminate an area. Later, other colours grew widely available and also appeared in appliances and equipment. As LED materials technology grew more advanced, light output rose, while maintaining efficiency and reliability at acceptable levels.

The invention and development of the **high power white light LED** led to its use for illumination, which is fast replacing incandescent and fluorescent lighting. With rising power output, it has grown increasingly necessary to shed excess heat to maintain reliability.

The first high-brightness **blue** LED was demonstrated by Shuji Nakamura and was based on the semi-conductor material InGaN. In 1995, Alberto Barbieri at the Cardiff University Laboratory investigated the efficiency and reliability of high-brightness LEDs and demonstrated a very impressive result by using a transparent contact made of indium tin oxide (ITO) on (AlGaInP/GaAs) LED. The existence of blue LEDs and high efficiency LEDs quickly led to the development of the **first white LED**, which employed a $Y_3Al_5O_{12}$:Ce, or "YAG", phosphor coating to mix yellow light with blue to produce light that appears white. Nakamura was awarded the 2006 Millenium Technology Prize for his invention.

The development of LED technology has caused their efficiency and light output to double about every 36 months since the 1960s. In the future, some of the most incredible uses of LEDs will actually come from organic light emitting diodes, or **OLEDs**. The organic materials used to create these semiconductors are flexible, allowing scientists to create bendable lights and displays. Someday, OLEDs will pave the way for the next generation of TVs and smart phones - can you imagine rolling your TV up like a poster and carrying it with you anywhere? The following report is an indication of the continuing rapid development of LED technology.

"CERN Courier Jul 19, 2011

Full spectrum tunable LED

Standard LEDs light up in just one colour, but now in a remarkable breakthrough, Gyu-Chul Yi of Seoul National University and colleagues have demonstrated an LED that can be tuned continuously from red to blue. The device is based on gallium nitride nanorods coated with layers of indium gallium nitride to form quantum wells – effectively, tiny artificial atoms. The thicknesses of the layers vary naturally when they are produced and, by changing the applied voltage, current can be pushed through different layers, giving rise to different colours of emitted light. The implications for display technology are as obvious as they are amazing.

Further reading:

Young Joon Hong *et al.* 2011 *Advanced Materials* online. doi: 10.1002/adma.201100806."

HOW AN LED WORKS

An LED is made up of semiconductors, which are materials that have a varying ability to conduct electricity. Inside of an LED, there are two types of semiconductors: one that has an abundance of electrons (N-Type) and one that has room for

more electrons (P-Type). The P-Type semiconductor can be thought of as having many holes for electrons to fall into. This flow of electrons constitutes an electric current.

When a potential difference is applied to the diode, electrons travel from the N-type side to the P-Type side. When the electrons fall into one of the holes in the P-Type side, they release energy. Think of what happens when you drop a ball into a hole; the energy from the ball is transferred to whatever the hole is in. What can happen when an electron releases energy is really amazing, though. The energy from the electron falling into the hole is released in the form of a photon of light.

This continuous movement of electrons falling into the holes releases light, causing the LED to glow. This phenomenon doesn't create much heat, so it's a lot more efficient than an incandescent bulb.

LEDs can also be specialized to emit specific wavelengths of light based on the semiconductor used. A red LED uses aluminum gallium arsenide (AlGaAs), a green LED uses aluminum gallium phosphide (AlGaP) and a blue LED uses indium gallium nitride (InGaN). White LEDs, which are unique since white light consists of all colours of the rainbow, can be made by either combining red, green and blue LEDs or by coating a blue LED with a yellow phosphor (see previous section).

ADVANTAGES

The advantages of LEDs are as follows:

1. **Faster Turn On**: LEDs can reach maximum brightness faster, in fact almost instantly. (A typical red LED reaches full brightness in under a microsecond.)

2. **More Neutral Colours**: Compact Fluorescent Lights (CFL) and Incandescent Lights (IL) are known to give a warm/yellowish tint. LEDs are more neutral, with average output at lower wavelengths.

3. **Brighter**: LEDs are brighter generally, thus allowing a display to achieve even higher maximum brightness.

4. **Thinner**: The reason LEDs are coming into prominence is that it was driven by the lighting needs of laptops and TVs - LED back-lighting can be made thinner than CFL back-lighting. LEDs can be smaller than 2 mm^2, making for easy use in electronic circuits.

5. **Lifetime:** LEDs can have a relatively long useful life. (They do not have a filament that will burn out.) Estimated life is 35000 to 50000 hours of useful life, though time to complete failure may be longer. Fluorescent tubes typically are rated at about 10000 to 15000 hours, depending partly on the conditions of use, and incandescent light bulbs at 1000–2000 hours. Also, the degradation over time is less severe than for CFLs.

6. Light emitting diodes have a higher **luminous efficacy** (how efficiently electricity is converted to visible light). For example, a modern LED typically produces ca 76.9 lumens per watt compared to 17 lm/W for an incandescent bulb.

7. The main advantage is **efficiency**. In conventional ILs, the light-production process involves generating a lot of heat (the filament must be warmed). This is completely wasted energy, unless you're using the lamp as a heater, because a huge portion of the available electricity isn't going toward producing visible light. LEDs generate very little heat, relatively speaking. A much higher percentage of the electrical power is going directly to generating light, which cuts down on the electricity demands considerably. Furthermore, their efficiency is not affected by shape and size.

8. **Slow failure**: LEDs mostly fail by dimming over time, rather than the abrupt burnout of incandescent bulbs.

9. **Shock resistance**: LEDs, being solid state components, are difficult to damage with external shock, unlike fluorescent and incandescent bulbs which are fragile.

10. **Focus:** The solid package of the LED can be designed to focus its light. Incandescent and fluorescent sources often require an external reflector to collect light and direct it in a usable manner.

11. **Toxicity:** LEDs do not contain mercury, unlike fluorescent lamps.

12. **Cycling:** LEDs are ideal for use in applications that are subject to frequent on-off cycling, unlike fluorescent and incandescent lamps that burn out more quickly when cycled frequently, or high-intensity discharge lamps that require a long time before restarting.

13. **Dimming:** LEDs can very easily be dimmed, e.g. by lowering the current.

14. **Cool light:** In contrast to most light sources, white-light LEDs radiate very little heat in the form of IR emissions that can cause damage to sensitive objects or fabrics.

15. **Colour:** LEDs can emit light of an intended colour without the use of the colour filters that traditional lighting methods require. This is more efficient and can lower initial costs.

16. **Low power requirement**: Most types can be operated with battery power supplies.

DISADVANTAGES

1. **High initial price:** LEDs are currently more expensive, costing about 150 times the price of an incandescent lamp for the same luminous power. The additional expense partially stems from the circuitry and power supplies needed.

2. **Temperature dependence:** LED performance largely depends on the ambient temperature of the operating environment. Over-driving the LED in high ambient temperatures may result in overheating of the LED package, eventually leading to device failure. Adequate heat-sinking is required to maintain long life. This is especially important when considering automotive, medical, and military applications where the device must operate over a large range of temperatures, and is required to have a low failure rate.

3. **Voltage sensitivity:** LEDs must be supplied with the voltage above the threshold and a current below the rating. This can involve series resistors or current-regulated power supplies.

4. When they're used in harsh environments, (besides heat) they're particularly **susceptible to moisture and ultraviolet rays**. And if the LEDs are not well protected, their performance and lifespan will be reduced considerably. It's possible to apply protective coatings, but typical coatings add weight and distort the light.

5. **Light quality:** The spike at 460 nm and dip at 500 nm of cool-white LEDs can cause the colour of objects to be perceived differently than sunlight, red surfaces being rendered particularly badly. However, the colour rendition index (See Environmental Optics 3) of state-of-the-art white LEDs is much better.

6. **Area light source:** LEDs are difficult to use in applications requiring a spherical light field.

7. **Blue hazard:** There is a concern that blue LEDs and cool-white LEDs are now capable of exceeding safe limits of the so-called blue-light hazard. These LEDs emit proportionately more blue light than other sources. There is evidence that these wavelengths can cause damage to the retina, especially in patients with impairments such as macular degeneration.

Some LEDs can emit laser light, and these are used for handheld devices such as laser pointers and laser levels. Many of these devices use red LEDs and have very low beam powers (5 mW or less) that do not constitute an eye hazard. More recently introduced green and blue laser pointers may appear brighter than the red lasers, but do not necessarily

present a greater eye hazard. (Question for the reader: Why is this the case?) However, it should be noted that handheld laser devices can be bought with beam outputs ranging between 1 and 500 mW. The higher the beam power, the higher the likelihood of eye injury if the laser is shone into the eye.

Misuse of laser pointers (i.e. directing them at the eyes of pilots, drivers and others in public places) is indeed a public safety concern. In some jurisdictions this has resulted in regulatory controls on the sale and use of laser pointers, and the use of laser pointers to “flash” aircraft and other vehicles is considered a criminal offence.

Clinical instruments with white LED light sources are being introduced into the ophthalmic market. The above advantages and disadvantages of LEDs should be considered by the clinician when operating these instruments.