THIN LENSES II

AUTHORS

Michael Smith: Cape Peninsula University of Technology

PEER REVIEWERS

Dr B. Ralph Chou: Professor Emeritus, School of Optometry and Vision Science, University of Waterloo

Dr Vincent Nourrit: The University of Manchester

CHAPTER CONTENTS

SUMMARY OF IMAGE FORMATION 1
THE LENS EQUATION 2
NEWTON'S LENS EQUATION 3
LINEAR MAGNIFICATION 3
POWER OF A LENS 4
LENS SYSTEMS 4
LENSES IN CONTACT 4
LENS-MAKER'S EQUATION 5

SUMMARY OF IMAGE FORMATION

CONVERGING LENSES

N.B. When referring to an object position, F should be understood to be the first focal point. Similarly, F should be understood to be the second focal point when referring to an image position.

We can use the graphical construction techniques of the previous chapter to analyze the nature and the position of the images obtained for various object positions. The results obtained are as follows.

5. When the object is between the lens and the focal point′, the image is formed behind the object. It is virtual, erect and larger than the object. This is how a converging lens can be used as a magnifier.

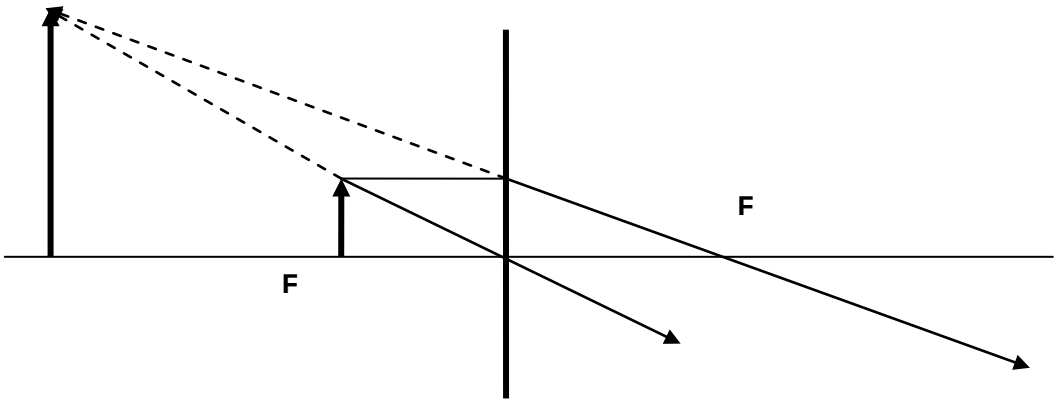

Figure 5.1: *Converging lenses: object between lens and focal point*

B. An object placed at the focal point produces an image at infinity.

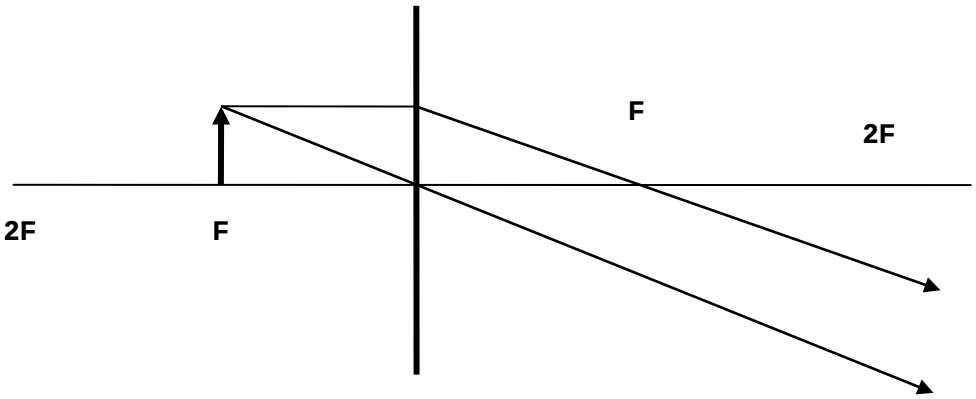

Figure 5.2: *Converging lenses: object at focal point*

C. When the object is between F and 2F, the image is formed beyond 2F.
The image is real, inverted and larger than the object.

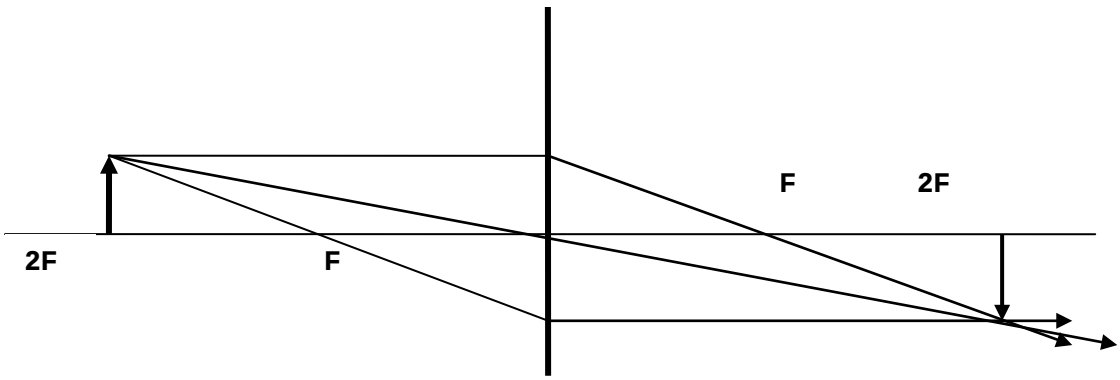

Figure 5.3: *Converging lenses: object between focal point and twice the focal length*

If we compare the situations in **A** and **C**, we see that in both cases an enlarged image is produced. However, the situation in **A** is preferred for the use of the lens as a magnifier, because there an ERECT image is produced.

D. When the object is at 2F, we find the image at 2F. It is real, inverted and the same size as the object. (See number 5 in Problem Set 4.)

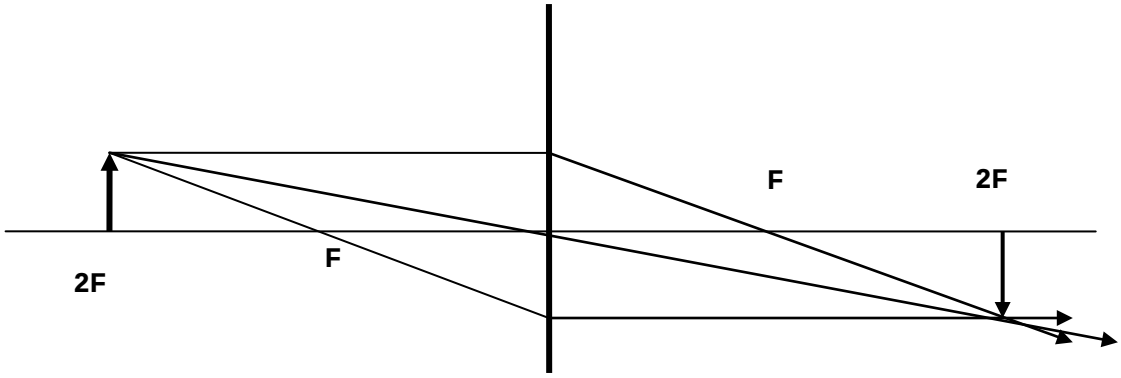

Figure 5.4: *Converging lenses: object distance at twice the focal length*

E. An object placed beyond 2F forms an image between F and 2F. It is real, inverted and smaller than the object.

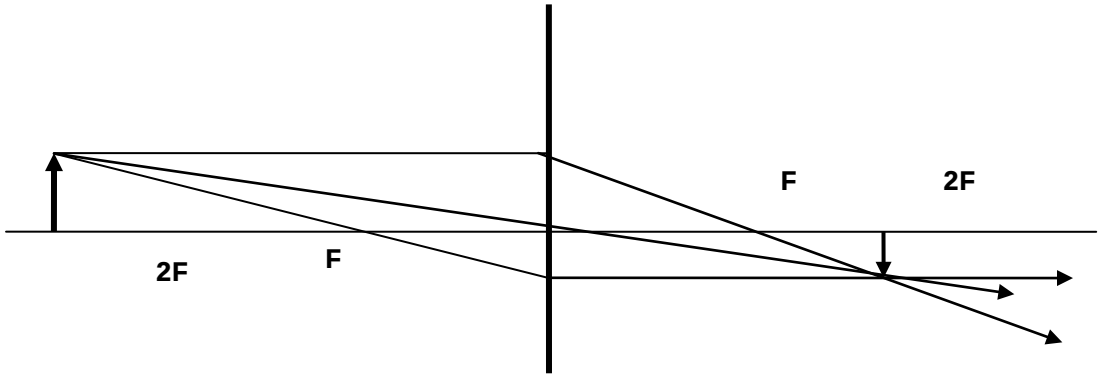

Figure 5.5: *Converging lenses: object distance further than twice the focal length*

F. When the object is at infinity, the image is at F. It is again real, inverted and smaller than the object. Recall that this is how the focal point of a converging lens was defined in the previous chapter.

DIVERGING LENSES

In the case of a converging lens, the image is sometimes real and sometimes virtual. In a diverging lens, the image is **always virtual, erect and diminished**. The image is **situated between the object and the lens**.

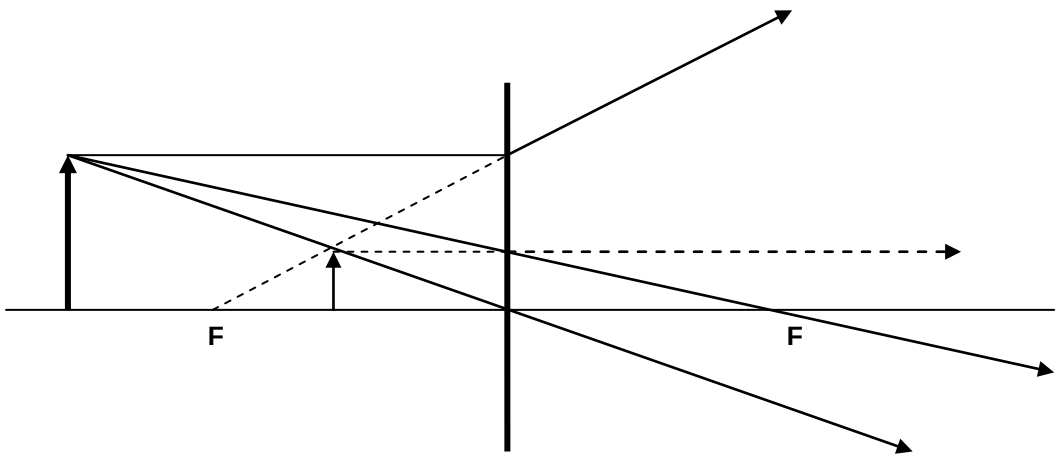

Figure 5.6: *Diverging lenses, for all object positions*

THE LENS EQUATION

Instead of carrying out ray-tracing for each situation, we can determine the nature and position of an image by calculation instead. A simple equation relates the positions of the image and the object of a thin lens to the lens's focal length, f.

$$\frac{1}{d_o} + \frac{1}{d_i} = \frac{1}{f}$$

Where d_o is the position (distance) of the object, d_i is the position of the image and f is the focal length.

We can rewrite the equation in terms of vergence as

$$L' - L = F$$

- L is the object vergence
- L' is the image vergence
- F is the focal power of the lens

Sign Convention

Converging lenses have a **positive focal length** and ***diverging*** lenses a ***negative focal length***.

NEWTON'S LENS EQUATION

Newton showed that the conjugate points O and I obey the relation:

$$x_1 x_2 = f^2$$

This formula states that the product of the distances of two conjugate points from the respective foci of a lens or mirror is equal to the square of the focal length.

From this, it follows that x_2 decreases as x_1 increases. This implies that the image recedes from the focus on the right (away from the lens) when the object approaches the lens. This can be confirmed with the ray diagrams at the start of this chapter.

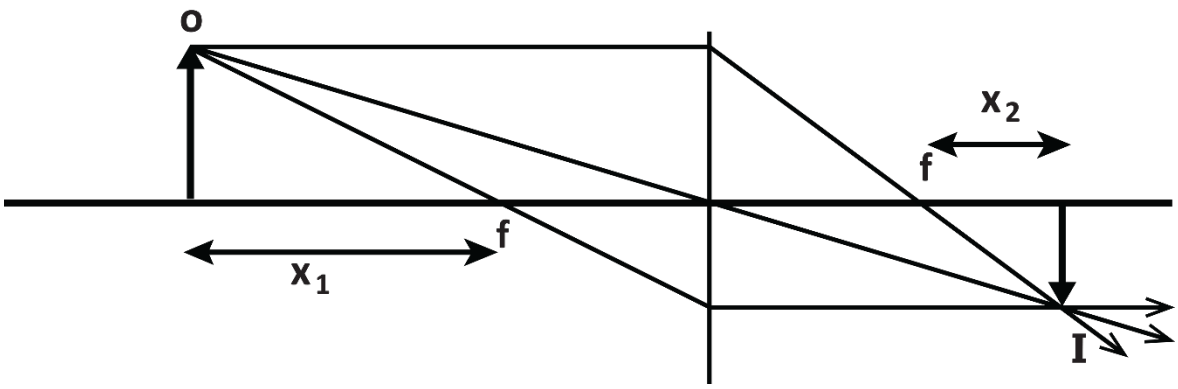

Figure 5.7: *Newton's lens equation*

LINEAR MAGNIFICATION

As previously stated in chapter 4, the **linear magnification** (m) of an optical system is the ratio between the size of the image and that of the object. A magnification of exactly 1 means that the image and the object are the same size. By "size" we mean any **linear** dimension such as height or width.

$$m = \frac{\text{Image Size (I)}}{\text{Object Size (O)}}$$

A relationship can also be derived relating magnification to image and object distances:

$$m = \frac{\text{Image Size (I)}}{\text{Object Size (O)}} = -\frac{d_i}{d_o}$$

If we use the sign convention specifying that distances above the optical axis are considered positive and that distances below are considered negative, we obtain the following result:

If the image is **erect** with respect to the object, the magnification is **positive**.

If the image is **inverted** with respect to the object, the magnification is **negative.**

The magnification is sometimes referred to as the relative size.

POWER OF A LENS

The **power** of a lens, F, is defined as the reciprocal of the focal length, in metres. The unit of power, m^{-1}, will be recognized as being the same as the unit of vergence, the dioptre (D). The power of a lens is thus its ability to change the vergence of a pencil of rays.

The fact that vergence at a point and the power of a lens share the same units, does NOT mean that the vergence at a point equals the power of a lens.

Expressed in symbols:

$$\text{Power} = \frac{1}{\text{focal length(m)}}$$

$$F = \frac{1}{f}$$

LENS SYSTEMS

In general, when light passes through more than one lens, we treat image formation by considering the lenses in turn. We first find the image formed by the first lens as if it were alone. **This image becomes the object for the second lens**. We then find the image formed by the second lens which will be the image formed by the lens combination.

The **total magnification** of the system is the **product** of the separate magnifications produced by each lens.

LENSES IN CONTACT

When an object is viewed through a single lens, the image is often coloured as a result of dispersion. This was dealt with earlier in this module. To counter this, the lenses of many optical instruments are made of two thin lenses placed in contact.

If f_1 and f_2 are the focal lengths of the individual lenses, the focal length of the lens combination is given by:

$$\frac{1}{f} = \frac{1}{f_1} + \frac{1}{f_2}$$

Note that the above equation is equivalent to stating that the powers are additive, that is:

$$F = F_1 + F_2$$

LENS-MAKER'S EQUATION

$$\frac{1}{f} = (n-1)\left(\frac{1}{r_1} + \frac{1}{r_2}\right)$$

This equation is known as the lens-maker's equation because it allows the calculation of the focal length of a lens from known radii of curvature of the two surfaces and a known refractive index.

The equation works for both concave and convex surfaces. However, for a **concave** surface the radius must be considered **negative**. Note that the equation is symmetrical in r_1 and r_2. Thus the same focal length is obtained if the lens is turned around and the light is incident on the other surface.