INTRODUCTION TO THE VISUAL FIELD

AUTHOR

Luigi Bilotto: Brien Holden Vision Institute

PEER REVIEWERS

Timothy Wingert, University of the Incarnate Word Rosenberg School of Optometry

Maureen Hanley, The New England College of Optometry

INTRODUCTION

This chapter includes a review of:

- Definition of the visual field
- Characteristics of the normal visual field

THE VISUAL FIELD – AN INTRODUCTION

DEFINITION

Every point in space is represented by a corresponding point on the retina. The sum of these points forms what is termed the visual field. The visual field (VF) is that portion of space in which objects are visible at the same moment during steady eye fixation (Fig. 5.1).

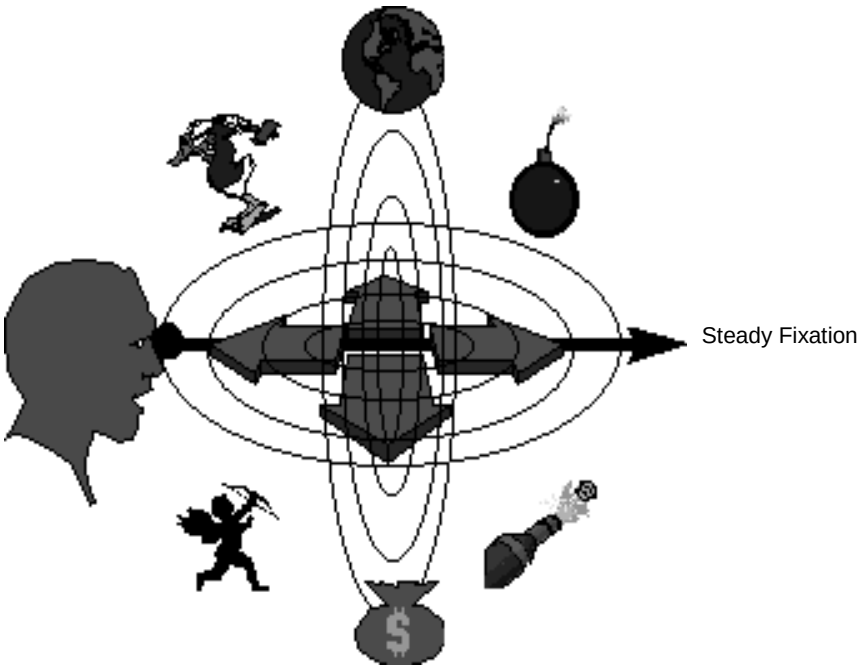

Figure 5.1: *Extent of the visual field*

CHARACTERISTICS

The normal monocular VF will form nearly ½ of a sphere ("egg-shaped") & will be situated in front of & surrounding the fixating eye of the observer. The **limits** of the monocular VF are approximately **60° nasally & superiorly, 75° inferiorly & 100° temporally** (Fig. 5.2)**.**

Physical traits such as the nose and brows form restrictions for the nasal and superior aspects of the field.

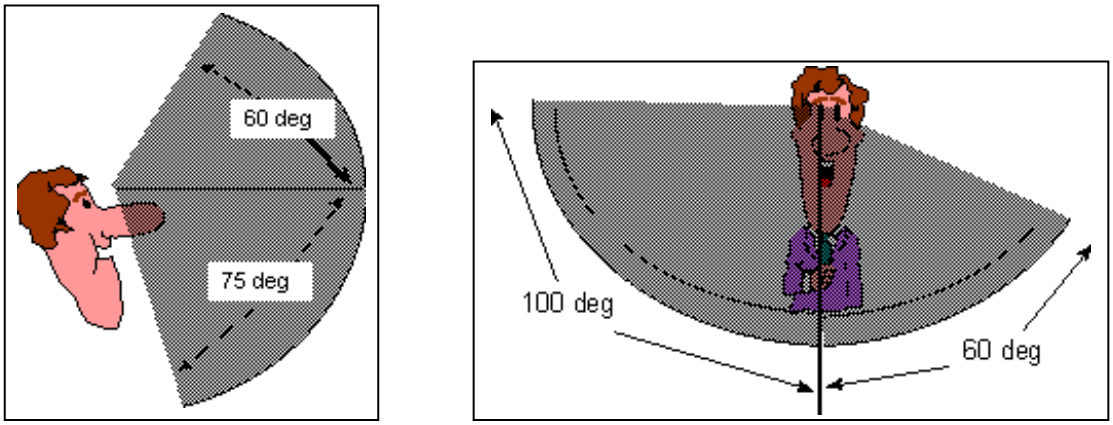

Figure 5.2: *Limits of the monocular visual field*

The **VF shape** is best described schematically using Traquair's **"<u>island hill of vision surrounded by a see of blindness</u>"** (Fig. 5.3). The island represents the VF as **a 3-D structure** with the tip representing the area of the VF with the greatest retinal sensitivity (Fig. 5.4). The height of the "island" decreases as one moves away from the center and sinks into the "ocean" in the far periphery. Hence the highest point of the island represent the foveal area and the progressively flattening land represents the reducing retinal sensitivity towards the periphery.

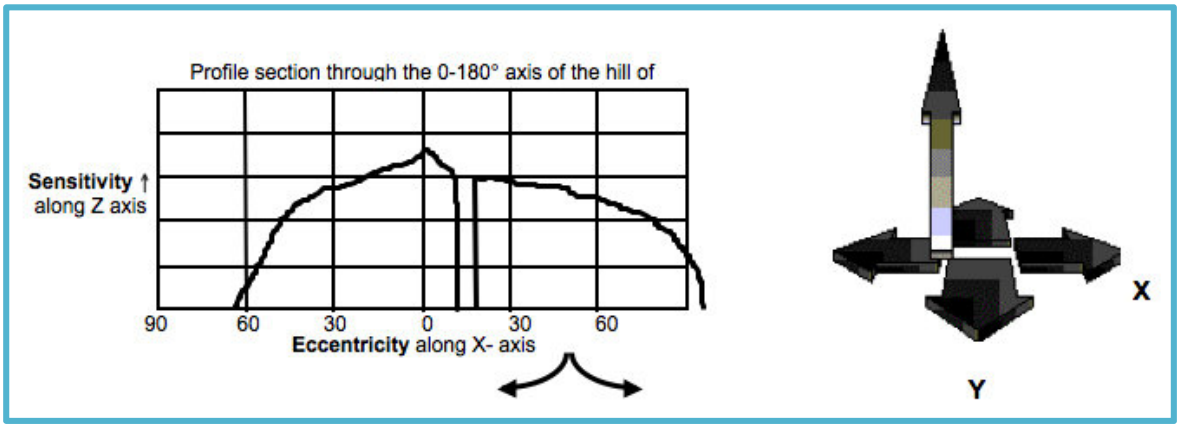

Figure 5.3: *Profile of the hill of vision*

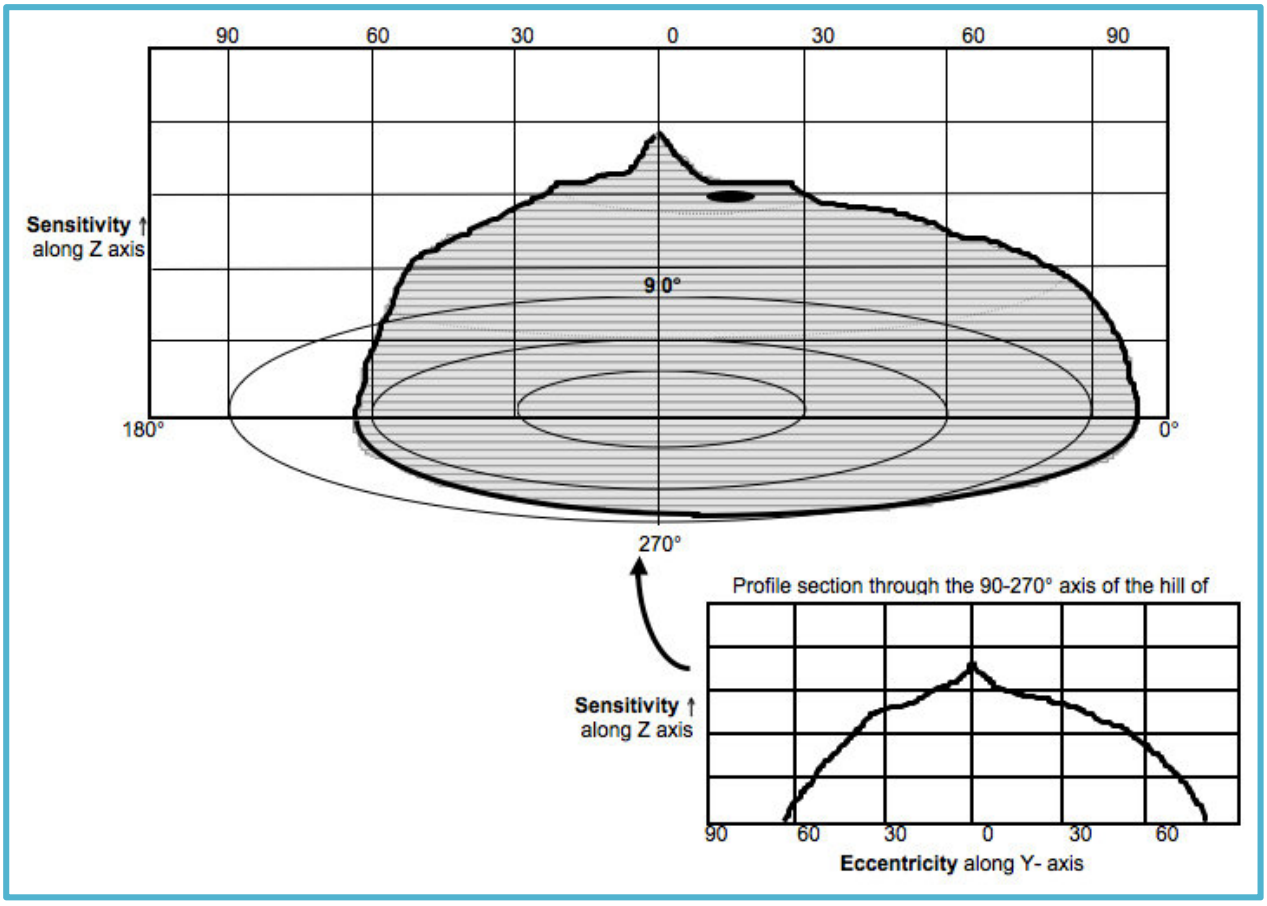

Figure 5.4: *Three-dimensional representation of the hill of vision*

The height at various points of the hill represents different levels of sensitivity. The top of the hill represents the area where the smallest and dimmest stimuli can be seen. The shape of the hill of vision is related to the photoreceptor **distribution and summation characteristics**. As eccentricity increases, the concentration of cones decreases while that of the rods increases. The ratio of photoreceptors to ganglion cells also increases towards the periphery going from a 1:1 ratio in the fovea to ~300:1 in the periphery. Hence VA & peak sensitivity drop rapidly the further we are from fixation. **To be perceived in our peripheral vision, larger and brighter stimuli are required.**

If a constant stimulus is moved from the center towards the periphery, it will become invisible at a certain distance from the top of the island. The point on the island at which the stimulus becomes invisible represents the outer boundary of visibility for that stimulus. Hence the target is the dimmest target perceived at that discrete retinal point or the **threshold**. **Suprathreshold** stimuli (bigger or brighter) will be more visible than the threshold and will be seen at that same retinal point; **infrathreshold** stimuli will be less visible and will not be seen.

Distance from fovea	VA
0°	6/6
3°	6/12
5°	6/21
10°	6/30
20°	6/60

Table 5.1: *Relationship between distance from fixation and visual acuity*

The shape, height and slope of the island of vision are established by drawing **isopters**. If the limit of visibility for a constant stimulus is found at several points around the visual field (i.e. moving 360° circumferentially along different X-Y axis), perimeters of equal threshold can be mapped. These boundaries, called isopters, represent **borders of equal sensitivity**. The threshold stimulus used to draw the isopter **will be visible everywhere within the isopter and invisible outside**.

Isopters can be mapped for different stimuli & represented on a 2-dimensional plane using contour lines just like a geographical map. If the isopters are drawn on a 3-dimensional plane, with the height representing sensitivity, the hill of vision arises. Aside from small interindividual variations, the isopters or contour lines are relatively constant in size & shape in the eyes of healthy individuals of the same age.

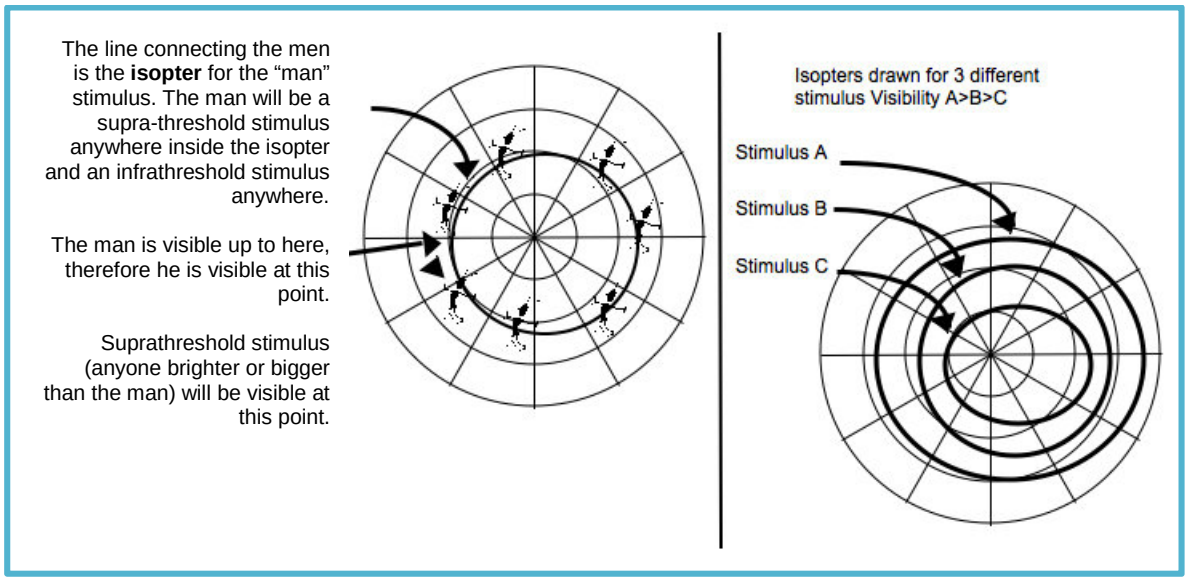

Figure 5.5: *Mapping if isotopers*

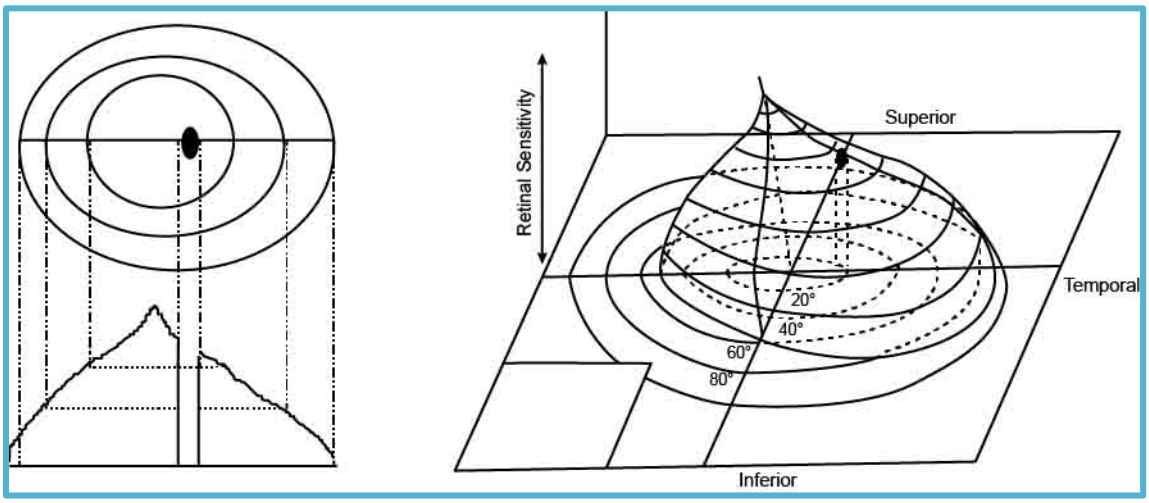

Figure 5.6: *Isotoper Plot vs. Profile section vs. 3-D profile plot*

A **blind spot** that corresponds to the ONH exists on the island of vision. The blind spot appears like a deep oval "hole" (area of 5.5° horizontal X 7.5°vertical) of total blindness that lies **15° temporally** from fixation. 1/5th of the blind spot lies above the horizontal meridian (Fig. 5.6).

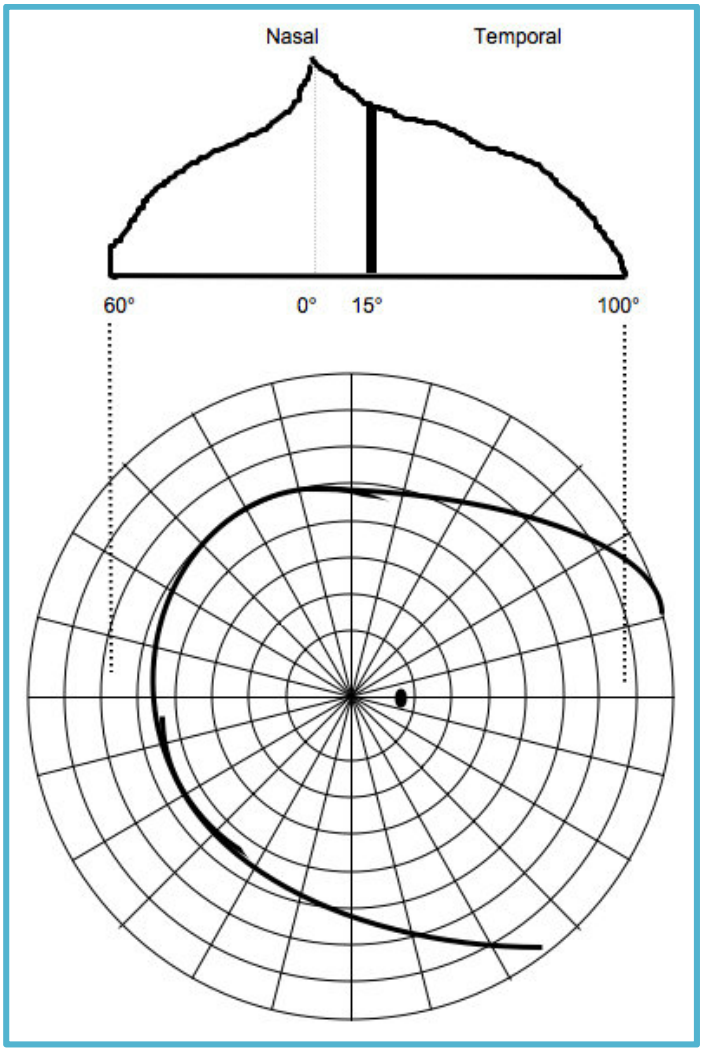

Figure 5.6: *Isotoper Plot vs. Profile section*

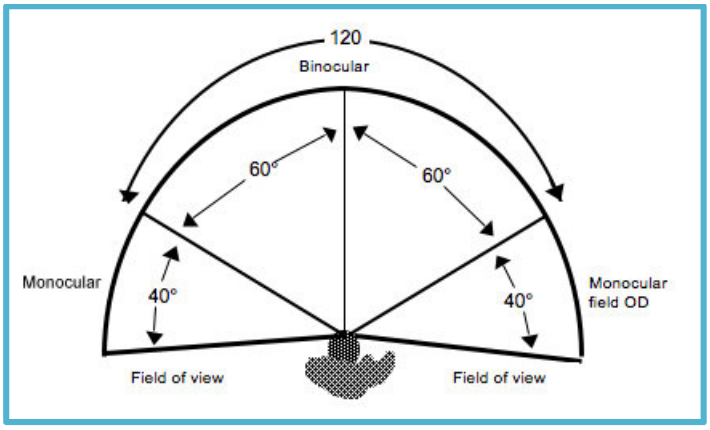

Figure 5.7: *Representation of the monocular vs binocular VF*