APHAKIA AND PSEUDOPHAKIA

AUTHOR

Prof. Earl L. Smith III: University of Houston

REVIEWER

Prof. Emeritus Barry L. Cole: University of Melbourne

INTRODUCTION AND OVERVIEW

This chapter includes a review of:

- Aphakic eyes corrected with spectacles
- Aphakic eyes corrected with contact lenses
- Aphakic eyes corrected with intraocular lenses

The term aphakia means 'no lens' (a = not; phakos = lens). An aphakic eye is simply an eye without a crystalline lens. Aphakia can be the result of a congenital anomaly or trauma, but it is most commonly associated with the surgical removal of a cataractous lens. Aphakic individuals have the largest refractive errors that are routinely encountered in the typical optometric practice. Because of the magnitude of the refractive error that is produced by removing the crystalline lens, special consideration must be given to these patients when they are corrected with traditional optical devices (i.e. spectacles or contact lenses).

APHAKIC EYES CORRECTED WITH SPECTACLES

When aphakic individuals are corrected with spectacles, it is important to consider 1) the effects of the power and shape of the correcting lens on the size of the retinal image, 2) limitations in the field of view associated with the prismatic effects of the correcting lens, and 3) the distortions associated with optical aberrations.

RETINAL IMAGE SIZE

In order to consider the effects of the correcting lens on the retinal image size, an appropriate schematic eye model must be developed. A modified version of a simplified schematic eye (like Gullstrand's #2 eye) makes a useful and practical aphakic schematic eye. In Gullstrand's #2 eye the cornea is considered to be infinitely thin and is represented by a single spherical refracting surface separating air from the aqueous humor. Therefore, when the crystalline lens is removed from Gullstrand's simplified schematic eye, the model takes on the characteristics of a reduced eye model. The principal planes move forward and coalesce to form a single principal point that corresponds to the vertex of the cornea. The nodal points move backward and form a single nodal point that coincides with the centre of curvature of the cornea. Figure 5.1 illustrates the basic dimensions of a simplified schematic eye modified to apply to aphakia (this is one version of Gullstrand's #2 eye).

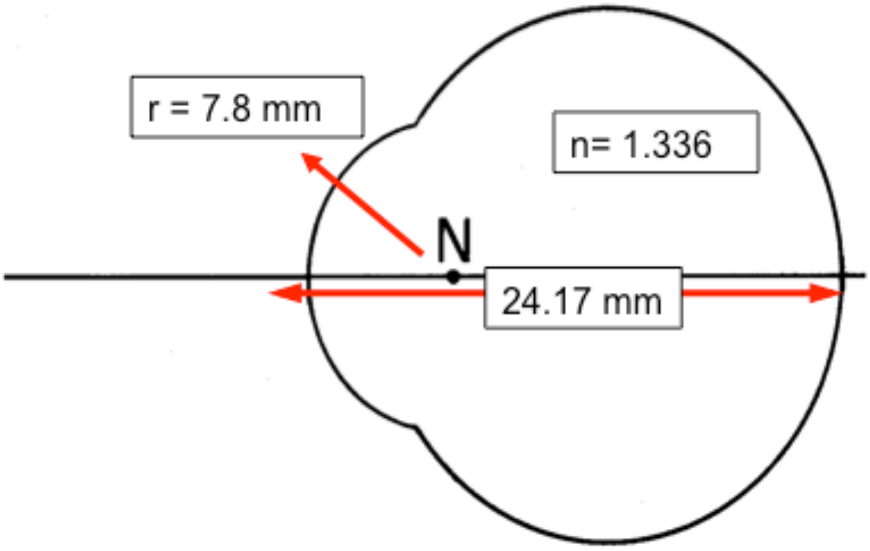

Figure 5.1: *Dimensions of a simplified schematic eye modified to apply to aphakia (after Gullstrand's #2 eye)*

Note: Obviously aphakia is primarily a refractive ametropia. However, it cannot be represented accurately by modifying Emsley's emmetropic reduced eye as we have previously done when we considered the effects of correcting lenses on the retinal image size of more typical refractive errors (i.e. we cannot simply increase the radius of curvature of the equivalent refracting surface of Emsley's reduced eye to form a large refractive hyperopia). These simple manipulations are not appropriate in the case of the aphakic eye, because the refractive error of an aphakic eye cannot be assumed to be exclusively axial or exclusively refractive in nature. Instead, aphakic refractive errors have both and an axial and a refractive component. The forward displacement of the principal planes represents, in essence, an axial elongation; the backward displacement of the nodal points reflects the refractive nature of the ametropia.

In order to determine the effects of spectacle lenses on retinal image size in an aphakic eye, the magnitude of the refractive error must be determined. If it is assumed that the aphakic eye was emmetropic prior to removing the crystalline lens, we can adopt the standard dimensions for the simplified schematic eye. Then the eye's ocular refractive error is simply the difference between the total refractive power of the aphakic eye and the refractive power required to focus parallel light from an object at infinity onto the retina. Since an aphakic eye does not have a crystalline lens, the total refractive power of the eye is equal to the refractive power of the cornea. For the aphakic schematic model,

$$F = (n' - n)/r$$
$$F = (1.336 - 1.0)/0.0078 \text{ m}$$
$$F = +43.08 \text{ D}$$

The refractive power required to focus parallel light on the retina is equal to the reduced vergence associated with the distance between the eye's principal plane and the retina (i.e. in this case the true axial length of the eye; 24.17 mm).

$$L' = n'/l'$$
$$L' = 1.336/0.02417 \text{ m}$$
$$L' = +55.3 \text{ D}$$

The additional power that must be added to the cornea to focus the aphakic eye for infinity is

$$K = 55.3 \text{ D} - 43.08 \text{ D} = +12.22 \text{ D}$$

i.e. the aphakic eye is a 12.22 D hyperope.

Assume that this aphakic eye is corrected by spectacles placed at a 14 mm vertex distance (see Figure 5.2). What would be the RSM and SM associated with this corrective strategy?

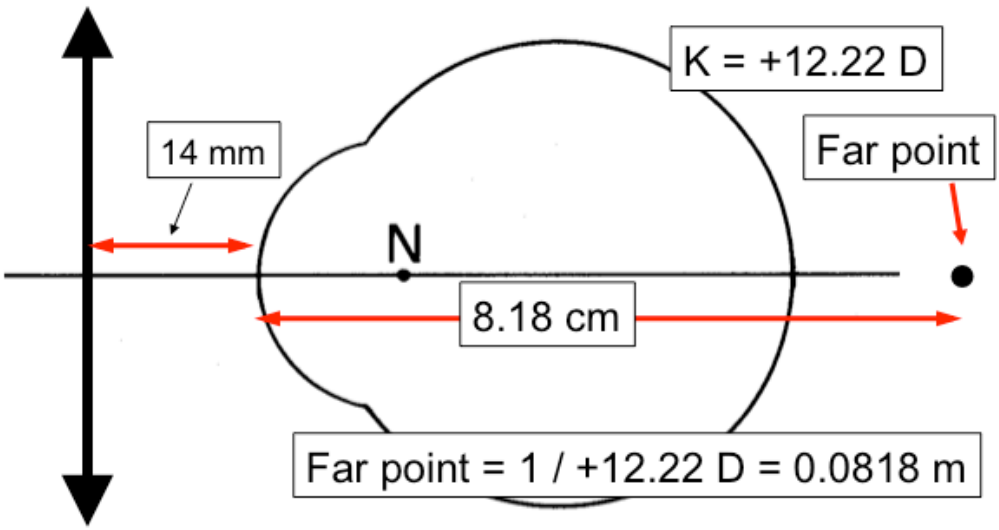

Figure 5.2: *An aphakic eye corrected by spectacles placed at a 14 mm vertex distance*

One of the most straightforward procedures for determining **Relative Spectacle Magnification** in this case involves calculating the total equivalent power for the aphakic eye-lens combination. First, the required effective power of the spectacle lens must be calculated.

F_v = 1 / distance between the spectacle plane and the eye's PR

The location of the eye's far point (PR) can be determined from the eye's ocular refraction.

1/+12.22 D = 0.0818 m

i.e. the PR is 8.18 cm behind the cornea.

The focal length of the correcting lens must equal the distance from the spectacle plane to the eye's PR (i.e. 8.18 cm + 1.4 cm = 9.58 cm). Therefore, the required power is

F_v= 1/0.0958 m = +10.43 D

Since RSM is equal to the ratio of the refractive powers of the standard emmetropic eye and the aphakic eye-lens combination, the following relationship can be used to determine the relationship between retinal image sizes in an emmetropic eye and this aphakic eye.

$$\text{RSM} = \frac{+60\text{ D}}{10.43\text{ D}+43.08\text{ D}-[0.014(10.43\text{ D})(43.03\text{ D})]}$$

$$\text{RSM} = \frac{+60\text{ D}}{47.22\text{ D}} = 1.27$$

i.e. the retinal image size in this aphakic eye is about 27% larger than that in the standard emmetropic eye.

Spectacle Magnification can be easily calculated using the following relationship:

$$\text{SM} = \frac{\text{distance between PR and spectacle plane}}{\text{distance between PR and principal plane}}$$

$$\text{SM} = \frac{9.58\text{ cm}}{8.18\text{ cm}}$$

SM=1.17

i.e. the spectacle correction increased the size of the uncorrected image by about 17%.

The fact that RSM is larger than SM in this case emphasizes the fact that a portion of this aphakic eye's ametropia is axial in nature. Specifically, the distance between this aphakic eye's principal plane and retina is larger than the corresponding distance in the standard emmetropic eye.

SHAPE MAGNIFICATION

The values for RSM and SM calculated above only reflect the effects of the power of the correcting lens on the size of the retinal image. For most refractive errors the correcting lens can be considered infinitely thin and the contribution of the shape of the lens to image magnification can be ignored. However, aphakic spectacle lenses typically have centre thicknesses between 6.0 and 7.0 mm and, therefore, the influence of the shape of the correcting lens on the final retinal image size must be considered (Figure 5.3).

Shape magnification is the angular magnification that is produced by the shape of the correcting lens and is related to the fact that with thick lenses the second principal plane of the correcting lens does not correspond to the back vertex of the lens. The shape magnification for a correcting lens (i.e. the shape factor; S) is dependent on the thickness of the lens (t), the refractive index of the lens (n), and refractive power of the front surface of the lens (F1). The following relationship can be used to calculate shape magnification for a correcting lens:

$$S = \frac{1}{1-(t/n)F_1}$$

Rays from dist. object

Shape Magnification
Angular mag due to the shape of correcting lens.

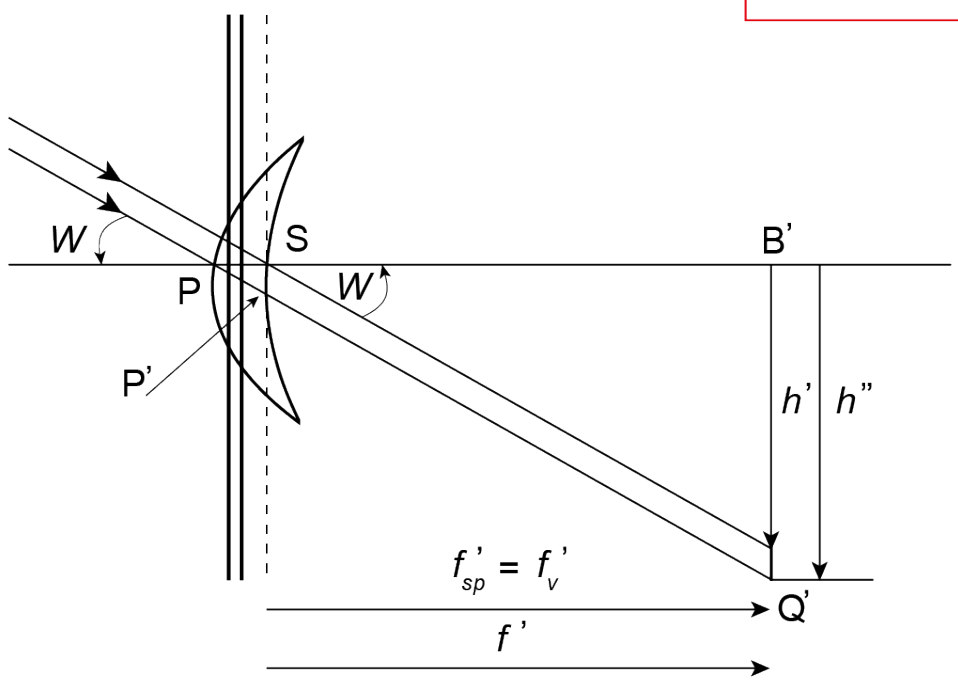

With a thick lens the principal planes will not correspond to the back vertex of the lens.

h[1] = image size based on back vertex power
h" = image size based on true power

Figure 5.3: *The influence of the shape of the correcting lens on the final retinal image size must be considered*

The following table lists typical shape factors for a series of plus lenses:

Lens Power (D)	Centre Thickness (mm)	Shape Factor
+2.00	2.5	1.01
+4.00	3.6	1.02
+6.00	4.8	1.03
+8.00	5.0	1.04
+10.00	6.0	1.05
+12.00	6.8	1.06
+14.00	7.6	1.08
+16.00	8.4	1.10

From this table it can be seen that the magnitude of the shape factor does not become significant until the power of the lens exceeds about 8.00 D. But for high hyperopes and the average aphakic individual, the shape factor must be considered in order to determine the total RSM and SM. The total RSM and SM are given by the following relationships:

Total SM = SM × S
Total RSM = RSM × S

i.e. the total magnifications are determined by multipling the RSM and SM values produced by the power of the correcting lens by the angular magnification (S) produced by the shape of the lens.

Note: Keep in mind that since the thickness of a minus lens does not increase as the power is increased, shape magnification is not an important consideration for myopic corrections, even when the magnitude of the correction is large.

For the aphakic eye considered above, if the shape factor is assumed to be 1.06, the total RSM and SM values will be:

Total SM = 1.17 × 1.06 = 1.24
Total RSM = 1.27 × 1.06 = 1.35

In this example the aphakic eye was emmetropic before the crystalline lens was removed. The final RSM will be different if the eye was ametropic before becoming aphakic. If the eye was axially myopic before becoming apakic, the final RSM will be greater than that of the previously emmetropic eye. If the eye was a refractive hyperope prior to removing the crystalline lens, the RSM would also be greater than that for the previously emmetropic eye.

Limitations in the Field of View

In addition to experiencing difficulties that are associated with the magnification produced by high-plus spectacle lenses, aphakes also experience limitations in their field of view due to the prismatic effects of these lenses. Consider the prismatic effect at the edge of a +10.00 D lens that has an overall diameter of 40 mm. The prismatic power at the edge of the lens can be calculated using Prentice's Law.

prism power = lens power(D) × dist. from the optical centre (cm)

Assuming that the optical centre of the lens corresponds to the geometrical centre of the lens, the prismatic effect at the edge of the lens described above would be:

prism power = +10.00 D × 2.0 cm = 20 prism diopters

Figure 5.4 illustrates how the prismatic characteristics of a high plus lens can result in an apparent scotoma in the patient's field of view. The patient is fixating a distant target through the optical centre of a high plus lens. The rays from a series of peripheral objects that are directed at the centre of the eye's entrance pupil are illustrated. For objects in the extreme periphery, these rays will not pass through the correcting lens, but instead will enter the eye by passing behind the edge of the lens. These rays will strike the retina and are capable of producing visual sensations that can be perceived (i.e. the patient can see objects placed at these positions). However, there will be a series of object positions where the chief rays from the object will intersect the peripheral edge of the lens and be prismatically deviated to such an extent that they will not enter the eye (i.e. objects placed at these positions cannot be seen). As object positions closer to the optical axis of the lens are considered, there will be a position where the light, despite being deviated by the prismatic effects of the lens, will enter the eye. Objects placed at this position can be seen. All objects positioned more centrally than this point are also capable of being visualized.

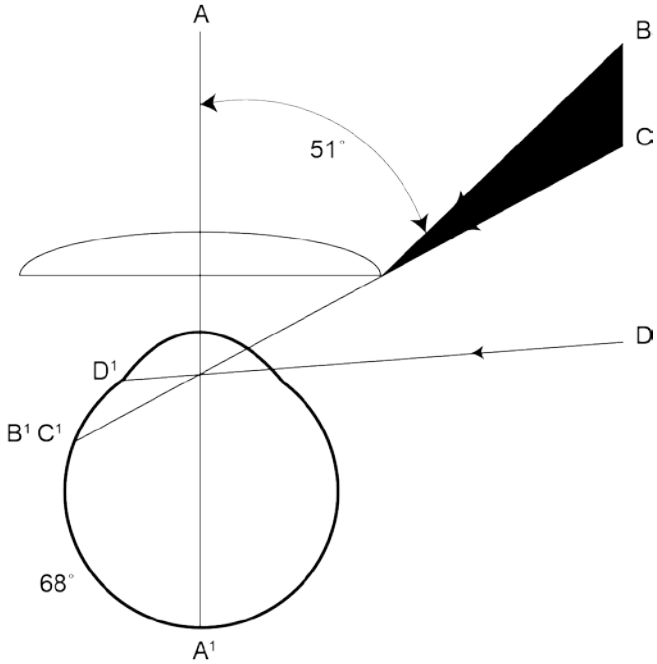

Figure 5.4: *Illustrates how the prismatic characteristics of a high plus lens can result in an apparent scotoma in the patient's field of view*

The overall effect of the prismatic deviations produced by high-powered plus lenses is a blind area that surrounds the central visual field, i.e. a ring scotoma. The position and the angular size of the scotoma depend on a variety of factors including the power of the lens, the diameter of the lens, the vertex distance, and the size of the patient's pupil. Typically the scotoma will begin at about 50° from the optical axis when the patient is viewing straight ahead through the optical centre and will be about 12° to 18° in extent.

As shown in Figure 5.5, as the eye rotates to view a peripheral object the prismatic effects of the lens alter the amount of rotation required to fixate an object off the optical axis of the lens. In this example, the eye rotates to fixate an object 20° to the right of the optical axis. Due to the prismatic deviation of the lens the eye must rotate about 27° (for a +12.00 D lens) to fixate the object. The ring scotoma is now only about 30° from the eye's visual axis, i.e. the ring scotoma is perceived to have moved in a direction opposite to the rotation of the eye. Because the position of this ring scotoma, with respect to the visual axis of the eye, varies as a function of the eye position, it is often called a ‘roving ring scotoma’.

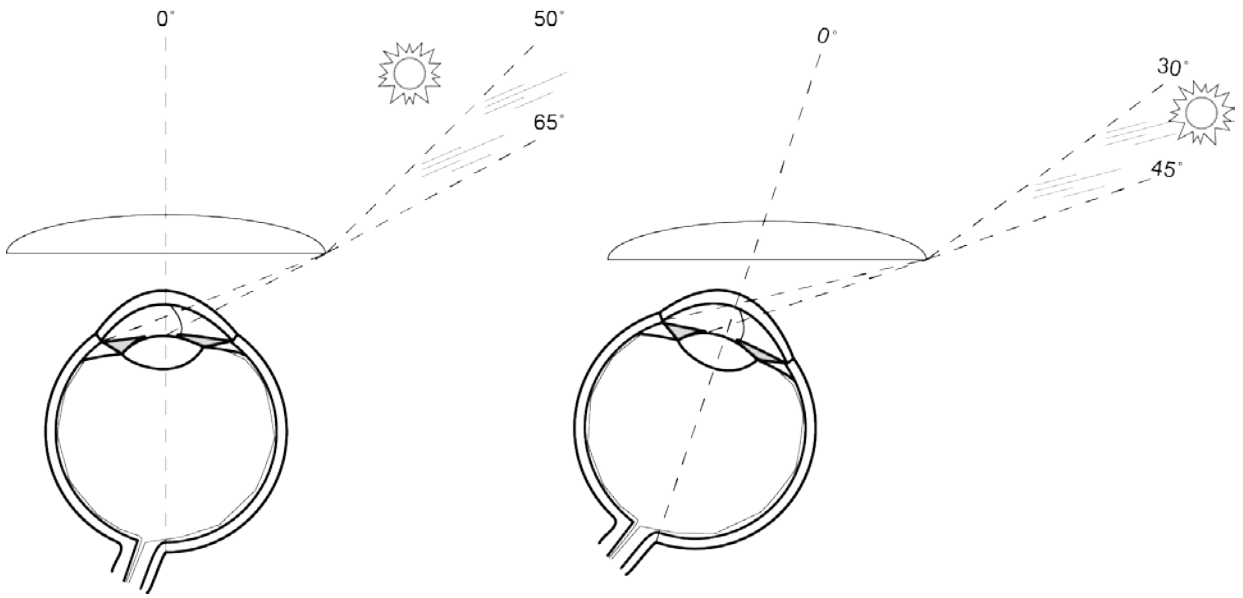

Figure 5.5: *The prismatic effect of the lens creates a 'scotoma' occluding the object of interest from view as the eye rotates to view a peripheral object*

The roving ring scotomas associated with high-plus lenses are responsible for a symptom often reported by aphakes corrected with spectacles that is called the 'jack-in-the-box phenomenon'. This phenomenon refers to the sudden appearance (or disappearance) of a peripheral object that was previously hidden from the patient's view in the ring scotoma, but which became visible either due to the patient's eye movements or to the movement of the object itself. This can be particularly disturbing when a peripheral object catches the attention of the patient and they rotate their eyes to fixate the object. In some instances, the ring scotoma will move, as a result of the eye movements, to occlude the object of interest from view.

Pincushion Distortion

In addition to the magnification of paraxial objects, the high-plus lenses required to correct aphakia result in a differential magnification across the visual field. The eye of a normal phakic individual does not suffer from a significant amount of either pincushion or barrel distortion (as discussed in the section on optical abberations). However, the removal of the crystalline lens together with the effects of the high-powered spectacle lenses produce a significant degree of pincushion distortion (i.e. the peripheral part of the field of view is magnified more than the central visual field.). As a result, straight lines in the peripheral part of the visual field may appear to be curved. The pincushion distortion produced by aphakic spectacle lenses is compounded if the correcting lens suffers from spherical aberration. The contribution of the correcting lens to distortion of the field of view can be minimized by employing aspheric lenses (i.e. lenses corrected for spherical aberration) to correct the patient's aphakia (aspheric lenses will also reduce the size of the ring scotoma). The majority of aphakic lenses employed today are aspheric.

APHAKIC EYES CORRECTED WITH CONTACT LENSES

Since aphakia is primarily a refractive ametropia, RSM and SM are substantially smaller when aphakic eyes are corrected with contact lenses. Figure 5.6 illustrates the effects of contact lenses on the retinal image size of the aphakic eye used in the examples above.

In aphakic eyes, the cornea is the only refracting structure. Moreover, the principal planes of the cornea are very close together and located very close to the corneal apex. As a result, when aphakic eyes are corrected with contact lenses, the correcting lens can truly be considered to coincide with the eye's principal plane. Therefore when the aphakic eye is corrected with contact lenses, SM will equal 1.0; i.e. the contact lens correction will not alter the size

of the uncorrected retinal image (remember that the optical centre of the contact lens is assumed to correspond to the vertex of the cornea). However, unlike phakic eyes that have refractive ametropias, RSM will not equal SM. Instead, RSM in the aphakic eye corrected with contact lenses will be greater than 1.0 because there is an axial component to the aphakic ametropia.

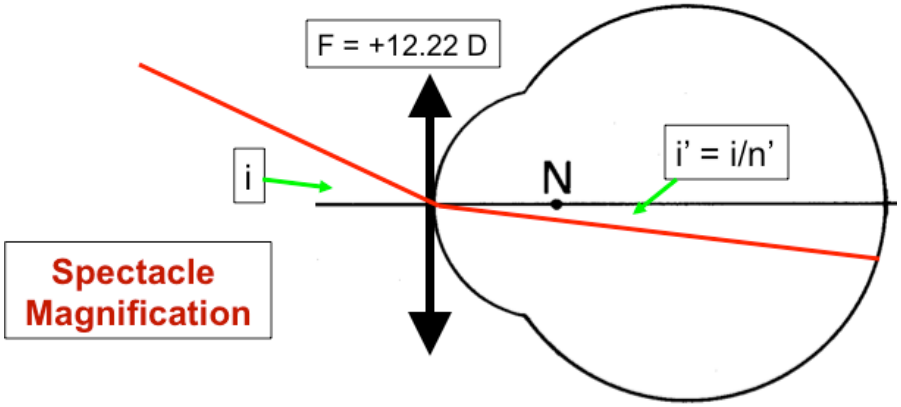

Figure 5.6: *The contact lens correction will not alter the size of the uncorrected retinal image*

To calculate RSM in an aphakic eye corrected with contact lenses, you must know either the ocular refraction or the eye's axial length (in this case the distance between the eye's principal plane and its retina). In the following solution, RSM is calculated based on the equivalent power of the aphakic eye-lens combination.

$$\text{RSM} = \frac{+60\text{ D}}{12.22\text{ D}+43.08\text{ D}-[0.0(12.22\text{ D})(43.03\text{ D})]}$$

The primary advantage of employing this relationship to determine RSM is that the factor that takes into account the separation between the refracting elements is zero when the correcting lens coincides with the eye's principal plane. As a result the equivalent power of the eye-lens combination is simply equal to the power of the eye plus the power of the correcting lens. i.e.:

$$\text{RSM} = \frac{+60\text{ D}}{12.22\text{ D}+43.08\text{ D}} = 1.08$$

The following solution can be employed if you know the aphakic eye's axial length.

$$\text{RSM} = \frac{\text{image size corrected ametropic eye}}{\text{image size emmetropic eye}}$$

Assume that a distant object subtends a visual angle of 0.1 rad at the aphakic eye's principal plane. Since the optical centre of the correcting lens corresponds to the vertex of the refracting surface, a ray directed at the vertex of the cornea will not be deviated by the correcting lens. The ray will be refracted by the cornea and the angle that the retinal image subtends at the principal plane can be obtained using a simplified version of Snell's Law. The retinal image size can then be determined by simple geometry.

h' = retinal image size (aphakic eye)
h' = 0.075 rad (image angle) × 24.17 mm (axial length)
h' = 1.81 mm

The size of the retinal image formed in Emsely's emmetropic reduced eye can be calculated in a similar manner (1.678 mm). Then RSM can be calculated as follows:

RSM = 1.81 mm / 1.67 mm = 1.08

i.e. the size of the retinal image in the aphakic eye corrected with contact lenses is about 8% larger than the image in the standard emmetropic eye.

Note: It is generally accepted that an interocular difference in retinal image size of about 5% is sufficient to disturb binocular single vision (i.e. cause diplopia, alterations in perceived space, asthenopia, etc.). It is obvious from the examples above that a monocular aphakic individual corrected with traditional correcting lenses will suffer a clinically significant degree of anisekonia. It is virtually impossible for a monocular aphakic individual to achieve binocular single vision when corrected with spectacles. It has been reported that some monocular aphakes corrected with contact lenses are able to obtain binocular single vision with image size differences as large as 10%. However, typically even when corrected with contact lenses, monocular aphakes do not obtain binocular single vision.

From an optical point of view, the correction of an aphakic eye with contact lenses has many advantages over correcting the eye with spectacle lenses. However, there are a number of disadvantages. Typically, aphakic individuals are older than phakic patients. As a result, their corneas may not be able to tolerate contact lenses as well as those of younger patients. These older patients may also lack the dexterity required to insert and remove contact lenses properly. This problem is compounded by the fact that until the contact lenses are inserted, these patients have very large hyperopic refractive errors and no accommodation.

APHAKIC EYES CORRECTED WITH INTRAOCULAR LENSES

In light of all the optical disadvantages associated with correcting aphakic eyes with spectacles and contact lenses, it is not surprising that much effort has gone into the development of alternative correction strategies. The most logical approach is to replace the crystalline lens with an artificial lens positioned as close as possible to the normal location of the natural lens. Although the idea of replacing a cataractous lens with an artificial intraocular lens (IOL) is not new (there are reports of attempts to replace the crystalline lens with an artificial lens that are 200 years old), the advances in surgical procedures and the continued development of lens materials and designs that are readily tolerated by the eye have made IOL implants the treatment strategy of choice for aphakia. Recent surveys indicate that approximately 98% of the individuals rendered aphakic as a result of the removal of a cataractous lens are now corrected with IOLs.

As illustrated in Figure 5.7, there are a wide variety of IOL designs. IOLs are usually classified according to the location of the optical portion of the lens and/or the supporting structure. There are three broad classes of IOLs:

1. **Anterior chamber lenses** have the optical aspects of the lens in the anterior chamber and are typically supported by appendages that are fit into the angle of the anterior chamber.
2. **Pupillary lenses** (iris fixated) have the optical portion of the device in the plane of the pupil and are typically supported by the iris.
3. **Posterior chamber lenses** have the optical portion of the lens in the posterior chamber and are typically supported by the posterior capsule of the crystalline lens (in the case of an extracapsullar extraction) or by structures that fit into the ciliary sulcus.

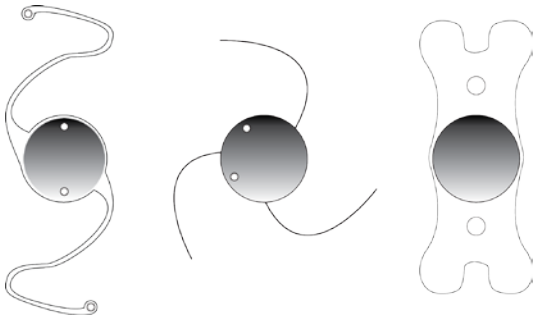

Figure 5.7: *There are a wide variety of IOL designs*

IOLs greatly reduce the resulting image magnification when an aphakic eye is corrected. However, since IOLs are always more anterior than the principal planes of the natural crystalline lens, there will be some increase in the effective retinal image size. Anterior chamber lenses and pupillary lenses usually result in a post-operative increase in magnification of about 2 to 3%. Posterior chamber lenses, since they are located closer to the position of the natural lens, usually produce less than a 2% post-operative increase in image size. Obviously, the magnification effects of IOLs are trivial in comparison to those associated with spectacles or contact lenses. A more critical aspect of fitting an IOL is determining the appropriate power.

Three general procedures have been employed to determine the appropriate power of an IOL implant.

1. The 'Standard Lens' Approach

This approach involves simply selecting an average 'standard lens' (i.e. no effort is made to determine the optimal power of the IOL). This procedure is typically employed when critical pre-operative measurements can not be obtained (the practitioner does not have a keratometer and/or an ultrasound instrument) or where the practitioner is resistant or is not capable of employing one of several mathematical schemes to determine the appropriate power. Fortunately, the mean post-operative ametropia that results from implanting 'standard IOLs' (typically +19.5D lenses), is not very different from the mean post-operative ametropia obtained when efforts are made to optimize the IOL power. However, the range of post-operative ametropias obtained with standard IOL implants is much larger than that obtained when consideration is given to determining the appropriate power (see Figure 5.8). This is exactly what one would expect. Since the variation in the power of the crystalline lens across the adult population is small in comparison to that for other ocular optical constants and since the standard lens is designed for the 'average' eye, it will be adequate for a large proportion of the general population. But for those individuals that have crystalline lens powers that are not near the mean for the general population, the post-operative ametropia resulting from the use of a standard IOL implant may prove to be significant. The procedures to optimize IOL power are simple to employ and are widely available from IOL and instrument manufacturer. As a result, the standard-lens approach is not often employed; under ordinary circumstances, there are no good reasons why it should be employed.

2. The 'Anatomical' or 'Optical' Approach

This approach employs basic visual optics principals and takes into account important optical constants of the patient's eye (see Figure 5.8). The following equation is one of a family of similar equations (usually referred to as Binkhorst-Colenbrander equations, named after the individuals who derived the fundamentals for this approach) that are used to determine the optimal IOL power:

F(I) = IOL power
F_c = corneal power
d = dist. between the cornea and the IOL
L = axial length
n = refractive index of the aqueous and vitreous

$$F(I) = \frac{n}{L-d} - \frac{1}{1/F_c - d/n}$$

The basic equation is often modified to consider the distance between the apex of the IOL and its second principal plane. For example, the first term in the above equation is sometimes expressed as:

$$\frac{n}{L-d-(0.000062\ \text{mm})}$$

The F_c value in the second term is often modified to optimize the post-operative ametropia (for example, depending on the patient's visual requirements, it is often desirable to have a slightly myopic post-operative ametropia). The modified Fc value is often calculated as follows:

$$F_c' = F_c + \frac{1}{1/F_s - d_v}$$

Where,

F_s = the desired post-operative spectacle correction
d_v = vertex distance of the post-operative correction
F_c = corneal power

To use this equation to calculate IOL power, the refractive power of the cornea (standard keratometry; however in some instances a lower refractive index for the cornea is employed; n = 1.332) and the axial length of the eye are measured (A-scan ultrasonography). From these measurements and a knowledge of where the IOL will be placed in the eye (i.e. the value d), it is possible to calculate the desired IOL power.

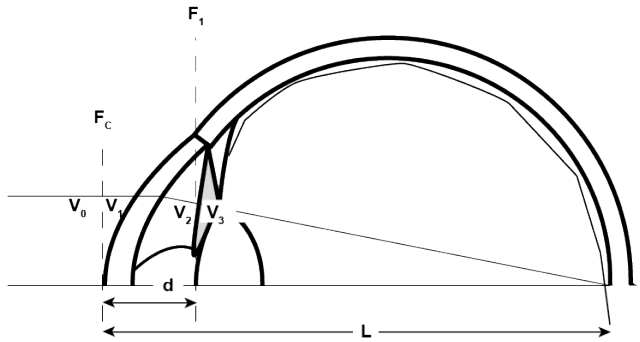

"Binkhorst" Equation

$$F_{IOL} = \frac{n}{L - d} - \frac{1}{(1/Fc) - (d/n)}$$

where
d = IOL position
L = axial length
Fc = corneal power

Figure 5.8: *The 'anatomical' or 'optical' approach to calculating IOL power*

The logic for determining the power of the IOL with this equation is straightforward. First, assume that it is desirable for the eye to be emmetropic with the IOL (i.e. we want light from a distant object that is parallel when it intersects the cornea to come to a focus on the retina.) The second term in this equation calculates the vergence of light at the IOL (i.e. after refraction at the cornea). The vergence of light at the IOL is a function of the power of the cornea and the distance between the cornea and the IOL. To fulfill the objectives of the IOL (i.e. to focus this light on the retina), we need to determine the amount of convergence required to focus light from the IOL onto the retina. The distance between the IOL and the retina is simply the difference between the axial length and the value d, the distance between the cornea and the IOL. The reduced vergence associated with this distance [i.e. n/(L−d)] is the vergence that light must have when it leaves the IOL to come to a focus on the retina. The first term in the Binkhorst equation provides this information. The desired power of the IOL is simply the difference between the vergence of light impinging on the IOL and the vergence of light required to focus light from that point onto the retina (i.e. the difference between the vergence you have and the vergence you need).

3. The Regression Line Approach

This is an empirical approach that is based on pre- and post-operative measurements from a large sample of patients who have received IOLs. The strategy of this approach is to determine a numerical relationship that relates pre-operative measurements (typically, corneal power, axial length and IOL power) to the post-operative refractive status. It is assumed that there is a linear relationship between the power of the IOL required to produce the desired post-operative refraction (e.g. emmetropia) and the pre-operative data (see Figure 5.9). The following equation is an example of the regression formula employed in this approach.

$$F_{(IOL)} = A + (B)(L) + (C)(F_c) + (D)(AC)$$

Where,

$F_{(IOL)}$= desired IOL power
A, B, C, & D are empirically derived constants
L = axial length (mm)
F_c = corneal power
AC = anterior chamber depth (mm)

The values, A, B, C, and D have no direct relation to any of the pre-operative measurements. These constants provide a weighting to the pre-operative measurements based on past experience. The exact values will depend on the type of IOL, the position of the IOL, the calibration of the instrument employed to measure the eye's axial length, etc. In the ideal situation, you would have a different regression line (the values for A, B, C, & D) for each practitioner, each lens design, and for any other factor that may influence the pre-operative measurements and the final position of the IOL (i.e. the skill of the surgeon).

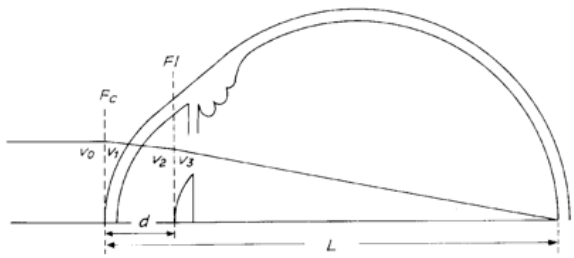

F_{IOL}= A + B(L) + C(Fc) + D(d)
typical values
A = 120.6
B = -2.49
C = -0.97
D = -0.0078

where
d = IOL position (mm)
L = axial length (mm)
Fc = corneal power

Figure 5.9: *The regression line approach to calculating IOL power*

Although this procedure is not based on optical principles, it has the advantage that the practitioner can modify the required IOL power based on past experiences with similar eyes (i.e. the values of the constants can be changed over time to further refine the selected IOL power; the exact regression employed can be tailored to the individual practitioner). For example, it is known that the degree of corneal flattening that normally occurs following cataract extraction does vary some from surgeon to surgeon; these individual factors can be reflected in the regression equations.

Comparisons of the results obtained with regression formulas and the Binkhorst-type equations indicate that the accuracy of both general approaches is about the same. With either approach, the post-operative refractive error is almost always within 2.00 D of the desired value (typically about 70% of the case are accurate to within about 1.0 D of the desired refractive status). There are however, some systematic errors that appear to be inherent in both approaches. In general, these procedures result in myopic errors for eye's with short axial lengths, but hyperopic errors for eye's with long axial lengths. It appears that with either approach, the most critical pre-operative measurement is that of the eye's axial length.

What is the desired post-operative ametropia in a patient undergoing an IOL implant procedure? Depending on the patient's visual requirements, it is usually desirable to render the eye slightly myopic. Since there is no accommodation in these eyes, it is never desirable to have a final ametropia that is hyperopic. The most advantageous post-operative refractive error is a small degree of simple myopic astigmatism. A simple myopic astigmatism is an advantage because it increases the range of object positions that produce a relatively clear retinal image in the uncorrected state.

BIBLIOGRAPHY

- Apple DJ, Kincaid Inc, Mamlis N, Olson RJ. Intraocular lenses: evolution, design, complications, pathology. Williams and Wilkins. Baltimore 1989. (Artist KrystynaSrodulski).