SCHEMATIC EYES

AUTHOR

Prof. Earl L. Smith III: University of Houston

REVIEWER

Prof. Emeritus Barry L. Cole: University of Melbourne

INTRODUCTION AND OVERVIEW

This chapter includes a review of:

- Ocular Parameters Commonly Used in Schematic Eyes
- Gullstrand's Exact Schematic Eye
- Effects of changing optical constants

OCULAR PARAMETERS COMMONLY USED IN SCHEMATIC EYES

ANTERIOR CHAMBER DEPTH

The Anterior Chamber Depth (ACD) is the distance between posterior corneal surface and apex of the anterior crystalline lens surface. The range of ACD extends from 2.7 to 4.5 mm with a mean value of about 3.45 mm.

REFRACTIVE INDEX OF THE CRYSTALLINE LENS

The parameters of a typical crystalline lens are shown in Figure 3.1. The lens typically has an anterior surface with a radius of curvature of approximately 6mm and a steeper posterior radius of curvature of approximately 10mm.

Measurement of the refractive index of the cornea (1.376), the aqueous humor (1.336), and the vitreous humor (1.336) are straightforward because these media are relatively uniform. However, the crystalline lens is not homogeneous, instead it consists of a series of laminae in which the refractive index gradually increases from the surface toward the centre of the lens. In young, adolescent individuals, the changes in the refractive index are continuous throughout the lens. With age, as the lens matures, the refractive indices of portions of the lens become sharply separated from the surrounding lens forming iso-index surfaces that may be observed with the slit lamp. In particular, the central nuclear portion or **core** of the lens becomes sharply demarcated from the surrounding **cortical** portion of the lens. The discontinuity in refractive index between the nucleus and cortex is sufficient to form catoptric images at the interface between the core and cortex.

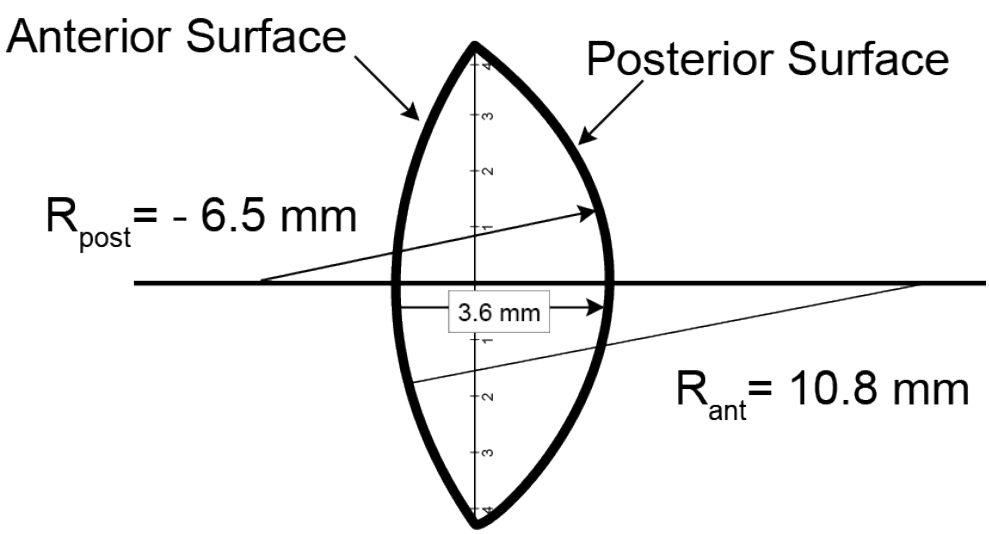

Figure 3.1: *Ocular parameters of a typical crystalline lens*

The indices of refraction of the ocular media cannot be measured accurately in the living eye. The values for index of refraction that have been used to develop schematic eye models are based on measurements obtained from post-mortem studies. The instrument usually used to measure the indices of refraction is the **Abbe Refractometer**. The refractometer consists of an observation telescope and a prism with a known refractive index. The telescope is used to find the critical angle of incidence for the interface between the prism and the substance in question. When a ray strikes the interface at the critical angle, the angle of refraction will be 90°, i.e. the refracted ray will coincide with the surface of the interface. Therefore, the sine of the critical angle for a given media varies with the ratio between the refractive index of the substance in question and the refractive index of the prism ($n_{unknown}/n_{prism}$).

The crystalline lens does not have a uniform refractive index. Even in a normal you eye, concentric zones of discontinuity, probably associated with different periods of growth can be noted. The discontinuity zones may be particularly apparent when an opacity is observed in one layer.

Although the lens is difficult to deal with in an optical sense, there are two important advantages to having a lens that does not have a uniform refractive index, but instead demonstrates a gradual increase in refractive index as you go from the surface toward the centre. First, the arrangement results in greater total refractive power. Even if the lens were homogenous with a refractive index equal to that of the lens centre, the equivalent core lens (i.e. a lens with a gradually increasing index of refraction) would have a greater refracting power. Second, the equivalent core arrangement reduces the amount of positive spherical aberration in the eye.

Since it is very difficult from an optical point of view to deal with structures that have a continuously changing refractive index, the lens is generally considered to consist of two discrete parts, a central biconvex **core** or **nucleus** surrounded by a larger biconvex lens called the **cortex**. The refractive indices of the cortex and core of the lens are usually considered to be 1.386 and 1.406, respectively. Schematic lens models that consist of two discrete areas, one inside the other, that have different but uniform refractive indices are called **equivalent core lenses** (see Figure 3.3).

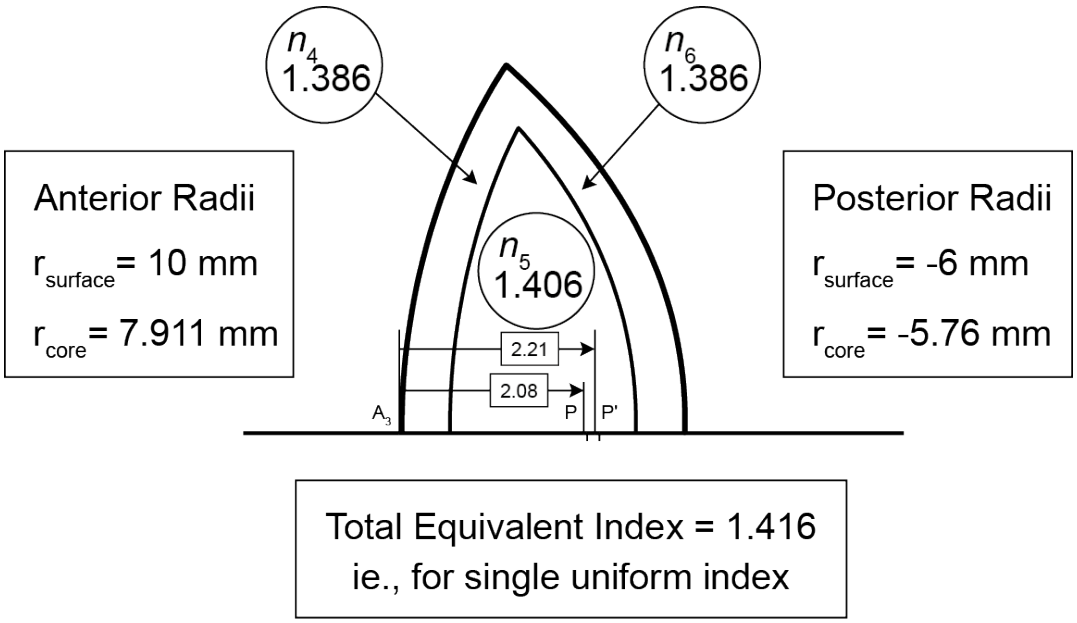

Figure 3.3: *Schematic showing the uniform refractive index needed to represent an equivalent core lens for the eye*

LENS POWER

In the unaccommodated state, the average lens power is generally taken to be about +20.8 D. However, the available data are highly variable and largely indirect estimates of power.

AXIAL LENGTH

Frequency distributions for individual ocular components, with the exception of axial length, conform to a normal, Gaussian distribution. Sorsby (1981) reported that axial length was randomly distributed in the general population. Although randomly selected, the population was small. Stenstrom (1948) reported that distribution is more peaked than “normal” (leptokurtotic) and asymmetric, including a larger number of longer eyes (see Figure 3.8). Since the distribution of refractive errors is leptokurtic, there cannot be free association between individual components. Highest correlation is typically found between refractive error and axial length.

GULLSTRAND’S EXACT SCHEMATIC EYES

Schematic eyes are models of the optical system of the eye. There are as many different schematic eyes as there are people studying the eye as an optical instrument. However, there are three basic types of schematic eyes that differ primarily in terms of their complexity. One of the most complete descriptions of the optical system of the eye is provided by **Gullstrand's Exact Schematic Eye** (also referred to as Gullstrand's # 1 eye; see Figure 3.4 and the accompanying Table 3.1). Gullstrand's exact schematic eye is a hyperopic eye (about +1.00 D) and consists of six refracting surfaces, four of which are associated with an equivalent core lens. The primary advantage of Gullstrand's exact eye is that all of the optical constants for the eye provide a very good approximation of the dimensions of the ‘average eye’. In this respect comparisons between the characteristics of a given patient's eyes and Gullstrand's exact eye can provide an indication of the nature of a patient's refractive error (i.e. is the patient's ametropia **axial** or **refractive** in nature?).

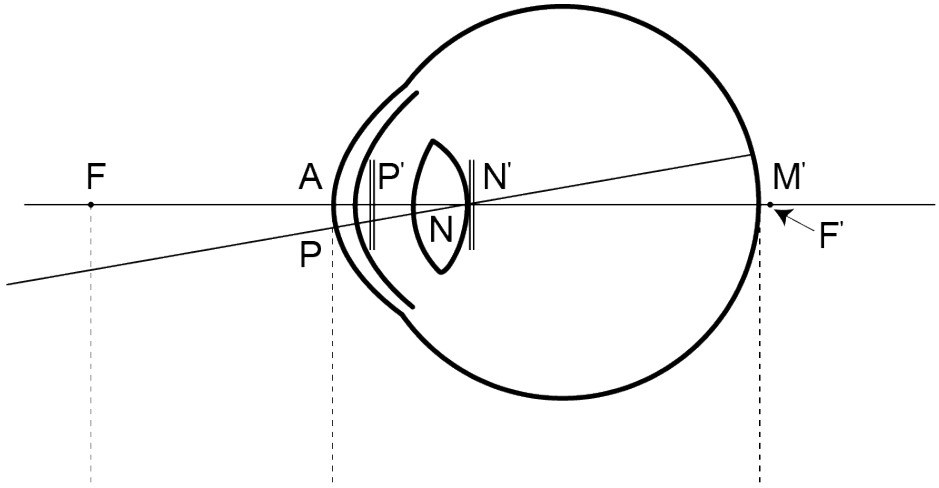

Figure 3.4: *Gullstrand’s Exact Schematic Eye #1 (Emsley 1955)*

F: far point; F’: focal point of the eye; A: apex of the cornea; P and P’: first and second principal points, N and N’: first and second nodal points; M: foveal centre (macular area).

Table 3.1 Features of Gulstand’s exact schematic eye #1

Key Features
Six refracting surfaces
Equivalent core lens
Hyperopic (+1.00 DS)
Accommodated and unaccommodated versions
Good approximation of the dimensions of the average eye

Note: You probably don't need to memorize the constants to Gullstrand's #1 eye. However, you should know enough of the details to determine if a patient's eye is abnormal in some way (e.g. abnormally long or short axial length, corneal curvature or anterior chamber depth). And, you should have a general appreciation of the optical organization of the eye, i.e. that the nodal points are both near the posterior surface of the crystalline lens; that the principal planes are very close together and located in the anterior chamber.

SIMPLIFIED SCHEMATIC EYES

Although Gullstrand's exact schematic eye is useful for understanding how the eye works optically, for most purposes a simpler version of the eye's optical system is sufficient. As a result, several schematic models have been developed that consist of only 3 refracting surfaces. Gullstrand's **Simplified Schematic Eye** (Gullstrand's # 2 schematic eye; see Fig. 3.5 and Table 3.2) is a good example of a 3-surface schematic eye. In simplified schematic eyes, the cornea is considered to be infinitely thin and it is represented as a single spherical refracting surface separating air from the aqueous humor. The crystalline lens is assumed to have a homogenous index of refraction. In Gullstrand's # 2 eye (the unaccommodated version), the curvatures of the anterior and posterior lens surfaces are the same as those used in the exact schematic eye. In order to compensate for the loss of refracting power associated with eliminating the equivalent core lens, the lens in the simplified eye is assumed to have a higher refractive index than the nucleus of the equivalent core lens (1.413 or 1.416 vs. 1.406). In contrast to the exact schematic eye, the simplified schematic eye is emmetropic.

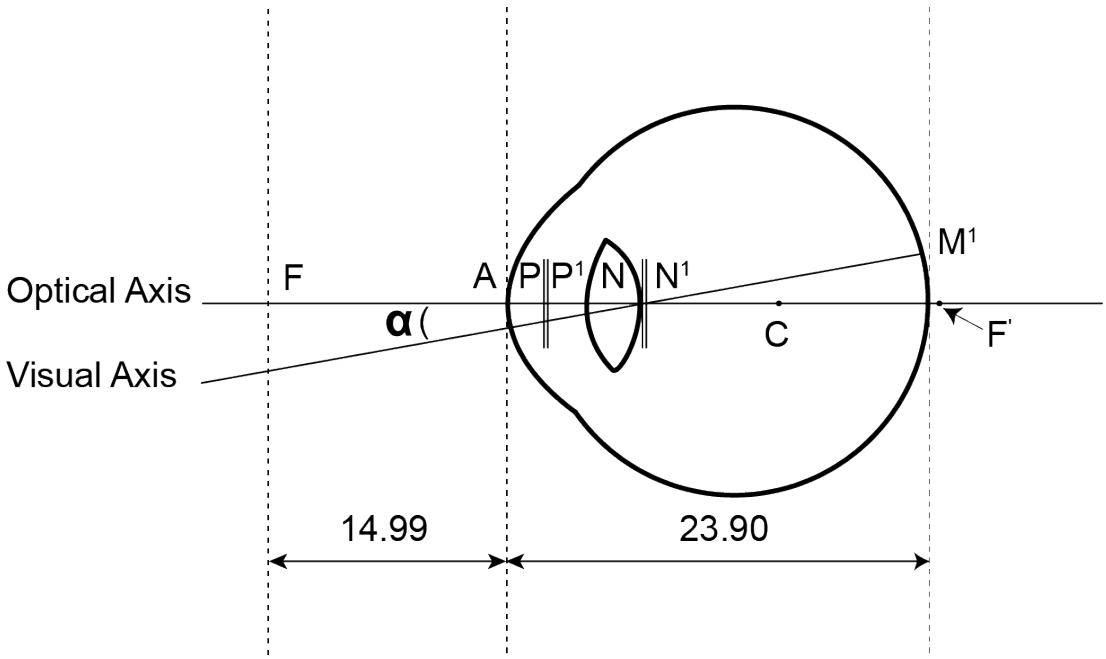

F = Far point
F' = Focal point of the eye
A = Apex of the cornea
P & P¹ = First and second principal points
N & N¹ = First and second nodal points
M = Foveal centre (macular area)
α = Angle between the optic and visual axes

Figure 3.5: *Gullstrand's Simplified Schematic Eye #2 (Emsley 1955)*

F: far point; F': focal point of the eye; A: apex of the cornea; P and P': first and second principal points, N and N': first and second nodal points; M: foveal centre (macular area); α: angle between the optic and visual axes.

Table 3.2 Features of Gulstand's Simplified Schematic Eye #2

Key Features
3 refracting surfaces
Refractive index of lens increased to 1.416 to make up for loss of gradient index
Emmetropic

REDUCED SCHEMATIC EYES

Even the simplified eye is too cumbersome for the majority of clinical applications. So Listing, followed by a number of other investigators, reduced the optics of the eye to a single spherical refracting surface. Listing's justification for putting all of the refracting power of the eye at a single surface stems from the fact that the first and second principal planes (and therefore the nodal points also) are separated by a very small distance -- only about 0.25 mm. Since a single spherical refracting surface has only one principal plane (which corresponds to the vertex of the surface, i.e. the point intersected by the optical axis) and one nodal point (which corresponds to the centre of curvature of the refracting surface), Listing combined the eye's two principal planes and the two nodal points each into single points representing the vertex and centre of curvature, respectively, of an equivalent spherical refracting surface. The position of Listing's reduced refracting surface was thus about 1.5 mm behind the cornea separating object space (air) and image space (the vitreous).

Note: For any optical system when the refractive indices on either side of the optical system differ, the optical system can be replaced by a single refracting surface – usually called an equivalent surface – whose vertex lies at the second principal point and whose centre of curvature corresponds to the second nodal point.

The reduced eye model that will be used in this course was computed by Emsley and is illustrated in Figure 3.6 and Table 3.3. Emsley's reduced eye is an emmetropic eye with an axial length of 23.9 mm. The single refracting surface is located 1.67 mm behind the cornea (22.22 mm in front of the retina) and has a radius of curvature of 5.55 mm. The index of refraction of image space is 4/3 and, thus, the refracting surface has a refractive power of +60.00 D.

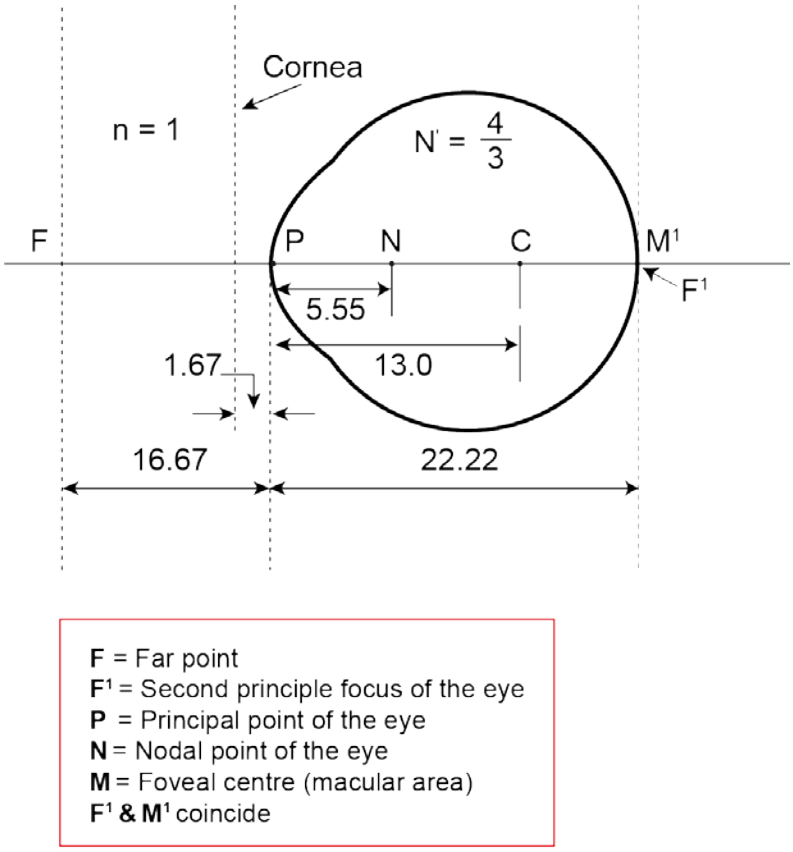

Figure 3.6: *Emsley'sReduced Eye (Emsley 1955)*

F: far point; F': second principle focus of the eye; P: principal point of the ey, N: nodal point of the eye; M: foveal centre (macular area); F' and M' coincide.

Table 3.3 Features of Emsley's Reduced Eye

Key Features
1 refracting surface positioned 1.67mm behind the cornea
Emmetropic
Total power +60 D

EFFECTS OF CHANGING OPTICAL CONSTANTS

The refractive status of an eye is dependent on the balance between the characteristics of the eye's refractive components and its axial length. The effects of altering axial length are quite obvious. Assuming that the optical components are unaltered, increasing the axial length of an eye will make the eye more myopic/less hyperopic. Decreasing axial length produces a relative shift away from myopia toward hyperopia. However, predicting the effects of altering the characteristics of an individual refracting surface, **in isolation**, is not as obvious. Since certain pathological conditions (e.g. diabetes) and treatment strategies (e.g. contact lens wear) can produce such alterations, it is important to understand how the refractive status of a patient can be changed by changes in the optical constants of the eye. In this respect, a working knowledge of the constants of the various schematic eyes will help predict how the refractive status of an eye is dependent on its optical components. There are three basic types of changes that can substantially alter the refractive status of the eye.

1. Curvature of refracting surfaces

The effects of changing the curvature of the eye's refracting surfaces are relatively easy to predict. With one exception, an increase in the curvature or steepness of a refracting surface (i.e. a decrease in radius of curvature) increases the refractive power of the eye (i.e. the eye will become more myopic/less hyperopic). The exception is the posterior surface of the cornea. Since the back surface of the cornea has a negative refractive effect in the eye, an increase in the steepness or curvature of the posterior corneal surface results in a decrease in total refracting power.

2. Position of refracting components

The effects of changing the position of a refracting structure can be predicted from a knowledge of the structure's refractive effect in the eye (i.e. plus or minus) and the formula for the equivalent power of a thick lens.

$$F_{eq} = F_1 + F_2 - (t/n)(F_1)(F_2)$$

For example, if the lens is moved forward toward the cornea, there is an increase in the eye's total refractive power. In this case, the cornea and the lens both have plus refracting effects in the eye, thus the distance factor $[-t/n(F_1F_2)]$ in the equivalent power formula will become smaller (because 't' is getting smaller) and result in a greater total refractive power (see Figure 3.7).

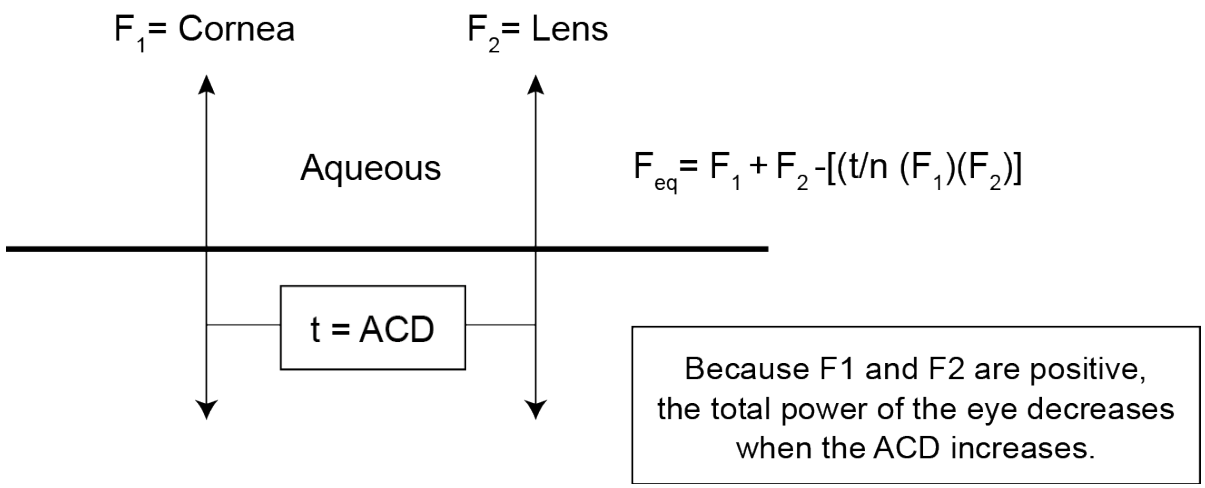

Figure 3.7: *The optical effects of changes in ACD alone are relatively small. For example, a 1mm forward displacement of the lens increases the eye's total power by about 1.4 D*

3. Index of Refraction

The effects of changes in refractive index can be easily predicted by conceptually introducing a thin layer of air between the adjoining ocular media. Introducing air between the media will not affect the direction of the refracted rays. When the media are separated by air, each one of the eye's optical elements forms a plus or minus lens except for the vitreous which can be considered to be a single spherical refracting surface (see Fig. 3.8). An increase in refractive index will increase or decrease the total refracting power of the eye depending upon whether the refractive effect of the particular element in air is plus or minus. For example, the aqueous humor and the nucleus of the lens form plus lenses in air and, therefore, an increase in their refractive index will result in an increase in the eye's total refractive power (i.e. a shift toward more myopia/less hyperopia). In comparison, the remaining elements form minus lenses and, thus, an increase in their refractive indices causes a relative shift toward hyperopia.

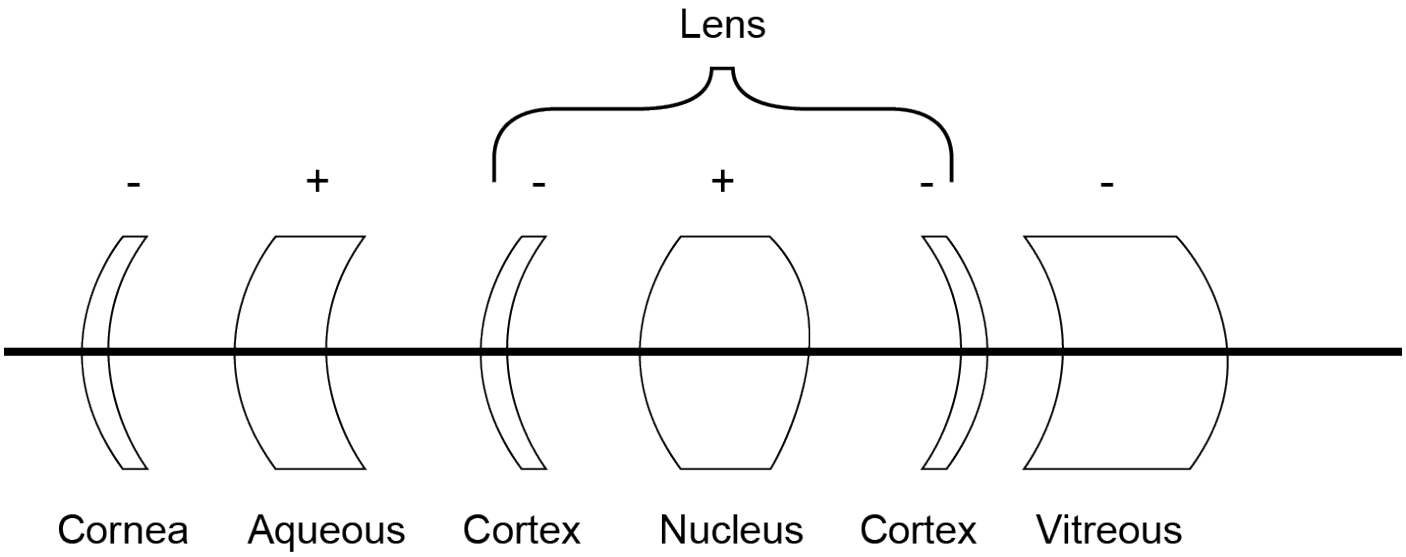

Figure 3.8: *An increase in refractive index will increase or decrease the total refracting power of the eye depending on whether the refractive effect of the structure in air is positive or negative (from Fry)*

The following calculations of the powers of the front and back surfaces of the cornea demonstrate that an increase in the cornea's refractive index will decrease the total positive refractive power of the cornea.

Assume the cornea has the following properties:

Anterior radius = 7.8 mm
Posterior radius = 6.8 mm
Refractive index(cornea) = 1.376
Refractive index(aqueous) = 1.336

The refractive power of the anterior surface would be:

$$F = \frac{1.376-1.0}{0.0078\text{ m}} = \frac{0.376}{0.0078\text{ m}} = +48.2\text{ D}$$

The refractive power of the posterior surface would be:

$$F = \frac{1.336-1.376}{0.0068\text{ m}} = \frac{-0.04}{0.0068\text{ m}} = -5.88\text{ D}$$

Now, assume that the refractive index of the cornea was increased to 1.386.

The new refractive power of the anterior surface would be:

$$F = \frac{1.386-1.0}{0.0078\text{ m}} = \frac{0.386}{0.0078\text{ m}} = +49.5\text{ D}$$

i.e. increasing the refractive index of the cornea by 0.010 produced a +1.3 D increase in the refractive power of the anterior surface.

The new refractive power of the posterior surface would be:

$$F = \frac{1.336-1.386}{0.0068\text{ m}} = \frac{-0.05}{0.0068\text{ m}} = -7.35\text{ D}$$

i.e. the increase in refractive index caused the posterior cornea to manifest an additional −1.47 D of negative power. Taken together, the net change in refractive power for the entire cornea produced by the 0.01 increase in refractive index would be about −0.2 D. This decrease in total plus power would cause the eye to become more hyperopic or less myopic. In essence, the change in index resulted in a net negative refractive effect because it had relatively greater impact on the difference in the refractive indices between the posterior cornea and the aqueous (i.e. at the interface that has a negative refractive effect) than upon the difference between air and anterior cornea.

BIBLIOGRAPHY

- Stenstrom S. Acta Ophthalmologica December 1948. 26 (4):582.
- H. H. Emsley Visual Optics, Vol. 1 (Hatton, London, 1955).